PULNiX

TM-7 / TM-6
TM-7CN / TM-6CN
TM-7EX / TM-6EX
TM-7X / TM6X
MINIATURE CCD CAMERA
(NEW VERSION)

OPERATIONS &
MAINTENANCE MANUAL

TM7/3.7.94

TABLE OF CONTENTS

1.	Features and Applications	p.2
2.	Specifications	p.3
3.	Physical Dimensions	p.4
	3.1 TM-7, TM-7CN, TM-7EX	
	3.2 TM-7X, TM-6X	
4.	Camera System Accessories	p.5
	4.1 Shutter Control Unit	
	4.2 Power Cables	
	4.3 Lenses	
	4.4 Power Supplies	
5.	Setup and Operation	p.5
	5.1 Getting Started	
	5.2 Power Supply and Power Cable Setup	
	5.3 Attaching the Video Output	p.6
	5.4 Lenses	
	5.4.1 Back Focusing Lenses	
	5.4.2 Auto-Iris Lens Setup	
	5.5 Shutter Control Setup	
6.	Shutter Operation	p.7
	6.1 BCD Shutter Control	
	6.2 Substrate Drain Shutter Mechanism	
	6.3 Sync Output and Clock Output	
7.	CCD Characteristics and Operation	p.8
	7.1 Theory of Operation	
	7.2 Mechanism of CCD Charge Transfer	
	7.3 Spectral Response	p.9
	7.4 Field Mode and Frame Mode	
8.	Timing Charts	p.10
	NTSC Vertical Pulse Drawing	p.11
	NTSC Horizontal Pulse Drawing	p.12
	PAL Vertical Pulse Drawing	p.13
	PAL Horizontal Pulse Drawing	p.14
9.	Adjustment Procedure	p.15
10.	External Sync Version TM-7EX/TM-6EX	p.16
	10.1 External Sync Specification	
	10.2 Pin Configurations	
	10.3 Asynchronous Reset	
	10.4 Phase Adjustment	
11.	Connector Board	
	11.1 Inpedance Selection	p.17
	11.2 Jumper Settin	p.17
12.	TM-7 Imager Board Schematic	p.18
13.	TM-7 Processor Board Schematic	p.19
14.	TM-7 Power and Sync Gen Board Schematic	p.20
15.	TM-7 Mother Board Schematic	p.21
16.	TM-7X Imager Board Schematic	p.22
17.	TM-7X Driver Board Schematic	p.23
18.	TM-7X Processor Board Schematic	p.24
19.	TM-7X Power and Sync Gen Board Schematic	p.25
20.	TM-7X Mother Board Schematic	p.26
21.	TM-7EX Genlock Board Schematic	p.27
22.	TM-7EX Mother Board Schematic	p.28

SECTION 1

FEATURES AND APPLICATIONS

HIGH RESOLUTION, INTERLINE TRANSFER CCD

The TM-7/TM-6 is a state-of-the-art CCD camera which uses a 1/2 inch high resolution imager. This unit offers outstanding compactness, high performance, long life, high stability as well as a number of technical innovations such as variable electronic shutter and asynchronous reset. It is designed to be a simple yet high quality camera for versatile applications such as machine vision and image processing, robotics, medical, and surveillance applications. The uniqueness of the TM-7 series is the size and resolution which is essential for the latest artificial intelligence. The TM-7 does not have external sync input since the majority of frame grabbers equip a phase lock loop circuit for video output. For applications requiring external sync, the TM-7EX is used.

VARIABLE ELECTRONIC SHUTTER AND RANDOM CCD INTEGRATION

The TM-7 / TM-6 has a substrate drain-type shutter mechanism which provides a superb picture at various speeds without smearing. The camera has the capability to externally vary the electronic shutter rate via a manually controlled BCD switch from 1/60 to 1/10,000 sec. in discrete steps.

MINIATURIZED AND LIGHTWEIGHT

All PULNiX cameras are built with the same design principles: solid state technology; miniaturization (including lenses, housings, and cables); specialization (such as remote imager and image intensified camera versions). The use of a CCD image sensor in the video camera module and the development of special mini C-mount lenses makes it possible to produce a very compact, lightweight, and robust series of cameras. The TM-7 series is the extension of this principle and makes the entire camera just like a remoted head.

LONG LIFE: A THREE YEAR WARRANTY

The CCD solid state image sensor allows the camera to maintain a superior performance level indefinitely while requiring virtually no maintenance. PULNiX backs all of the TM series cameras with a three year warranty.

WARNING: Unscrewing the camera cover or opening the camera in any way will void this warranty.

PRECISE IMAGE GEOMETRY

On the CCD image sensor, the photosensor elements form exact rows both horizontally and vertically so that a very precise image geometry may be obtained.

LOW LAG AND HIGH RESISTANCE TO IMAGE BURNING

Compared to the lag of conventional cameras which use a pickup tube, the lag of a CCD camera is considerably reduced so that a clear picture may be obtained when shooting a rapid moving object, or when shooting in a low illumination environment. Since the CCD is highly resistant to image burning, the camera may be exposed to bright objects for a long period of time. It must be noted that a "smear" phenomenon may occur when shooting a very bright object. An infrared cutoff filter is recommended to obtain a clear picture.

HIGH SENSITIVITY

The TM-7 series is one of the most low light sensitive 1/2 " CCD cameras available today. This is especially important when using the faster shutter speeds. The CCD detects images into the near infrared. It requires only 1.0 lux of minimum illumination and 0.5 lux minimum illumination at maximum gain. In general, such a low light camera allows use of a higher lens F-value and provides greater depth of field and sharper images.

HIGH RESISTANCE TO MAGNETIC FIELD AND VIBRATION/MECHANICAL SHOCK

Due to its ruggedized design, the CCD imager can withstand strong vibration and shock, and little or no noise will appear in the picture. Since the TM-7 series camera is not influenced by a magnetic field, it will produce stable images even when placed next to objects such as electric furnaces, welding machines, or NMR scanners.

QUICK START-UP AND LOW POWER CONSUMPTION

No more than 2 seconds are needed for the TM-7 series to warm up, and shooting may begin within a second after turning on the camera. The power consumption is only 3.0W. This makes the cameras excellent for use with battery operated systems.

GENLOCK CIRCUIT

A genlock circuit is not built into the TM-7 series to accept external sync. The design principle of this type of camera is intended for numerous usages in simple but demanding applications which require compact, high resolution and high quality, but most importantly, low cost cameras. External sync is built into the TM-7EX series for applications where external sync is required.

AGC SELECTION, MANUAL GAIN CONTROL AND GAMMA ADJUSTMENT (TM-7CN/TM6-CN)

The AGC (automatic gain control) may be externally switched from automatic to fixed gain on the TM-7CN back plate. The manual gain is externally adjustable. Gamma may also be externally set either to 1 or 0.45. These adjustments are particularly important in vision system applications.

SPECIFICATIONS

Imager:		1/2 inch interline transfer CCD
	Pixels	768 (H) x 494 (V) - TM-7 series
		752 (H) x 582 (V) - TM-6 series
	Cell size	8.4 (H) x 9.8 (V) microns - TM-7 series
		8.6 (H) x 8.3 (V) microns - TM-6 series
	Sensing area	6.41 (H) x 4.89 (V) mm
	Dynamic range	67dB
		Low noise, blooming suppression
	Chip size	7.95 mm (H) x 6.45 mm (V)
Scanning:		525 lines, 2:1 interlace - TM-7 (EIA) series
		625 lines, 2:1 interlace - TM-6 (CCIR) series
	Clock	28.6363 MHz - TM-7 series
		28.375 MHz - TM-6 series
	Pixel clock	14.31818 MHz - TM-7 series
		14.1875 MHz - TM-6 series
	Horizontal frequency	15.734 KHz - TM-7 series
		15.725 KHz - TM-6 series
	Vertical frequency	59.92 Hz - TM-7 series
		50.0 Hz - TM-6 series
Sync:		Int/Ext TM-7EX/TM-6EX
TV resolution:		570(H) x 485(V) lines - TM-7
		560(H) x 575(V) lines - TM-6
Video output:		1.0V p-p composite video, 75Ω
S/N ratio:		50 dB min.
Minimum illumination:		1.0 lux (F=1.4) without IR cut filter
AGC:		On (16dB standard, 32dB max) / Off
Gamma:		0.45 or 1
Lens mount:		C-mount
Power requirement:		DC 12V (9V min.) , 2.5 W
Operating temperature:		-10 °C to +50 °C
Storage temperature:		-30 °C to +60 °C
Operating humidity:		Within 70%
Storage humidity:		Within 90%
Vibration:		7G (11Hz to 200Hz)
Shock:		70G
Dimensions:	TM-7	45mm (W) x 39mm (H) x 60.4mm (L) — 1.77" (W) x 1.54" (H) x 2.38" (L)
	TM-7CN	45mm (W) x 39mm (H) x 75mm (L) — 1.77" (W) x 1.54" (H) x 2.95" (L)
	TM-7X	32mm (Dia.) x 84.5mm (L) — 1 1/4" (Dia.) x 3 5/16" (L)
	TM-7EX	45mm (W) x 39mm (H) x 80mm (L) — 1.77" (W) x 54" (H) x 3.15" (L)

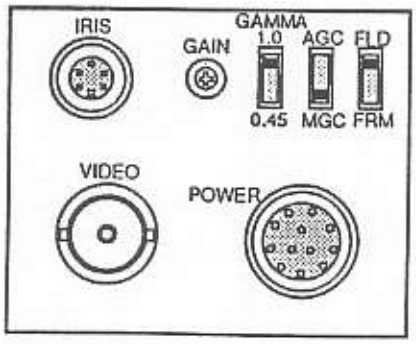

TM-7 CN/EX BACK PLATE

12 PIN CONNECTOR (TM-7CN)		CABLE (TM-7)
1	GND	Gray
2	+12VDC	Yellow
3	GND	Red coax shield
4	Video	Red coax
5	GND	Orange coax shield
6	Sync out	Orange coax
7	Clock out*1	Black coax
8	N/C	White shield (N/C *2)
9	Vinit in	White coax
10	N/C	Brown (5V)
11	N/C	Blue (D2 .... 1/1000 sec *3)
12	GND	Black coax shield

6 PIN (TM-7CN/EX) CONNECTOR	
1	D2
2	GND
3	Video
4	+12V(or 5V)
5	D0
6	D1

*1 28.6363 MHz external clock input (RV option)
*2 Auto-iris control output optional
*3 Can be set any speed between 1/60 through 1/10,000 sec.

3.1 TM-7CN/TM-6CN

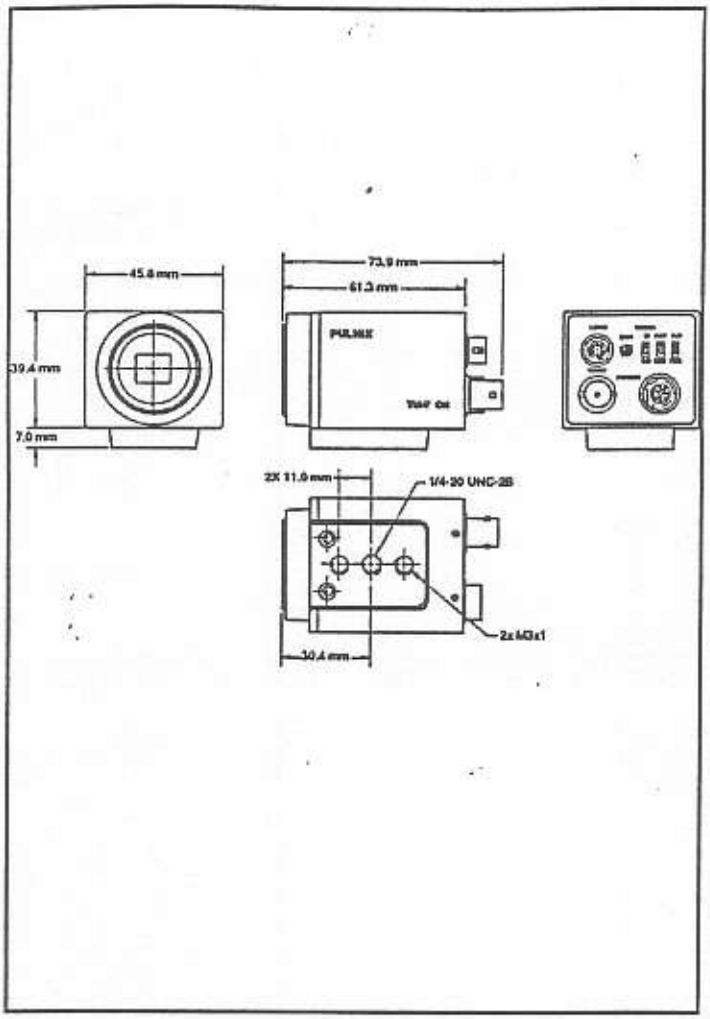

3.2 TM-7EX/6EX

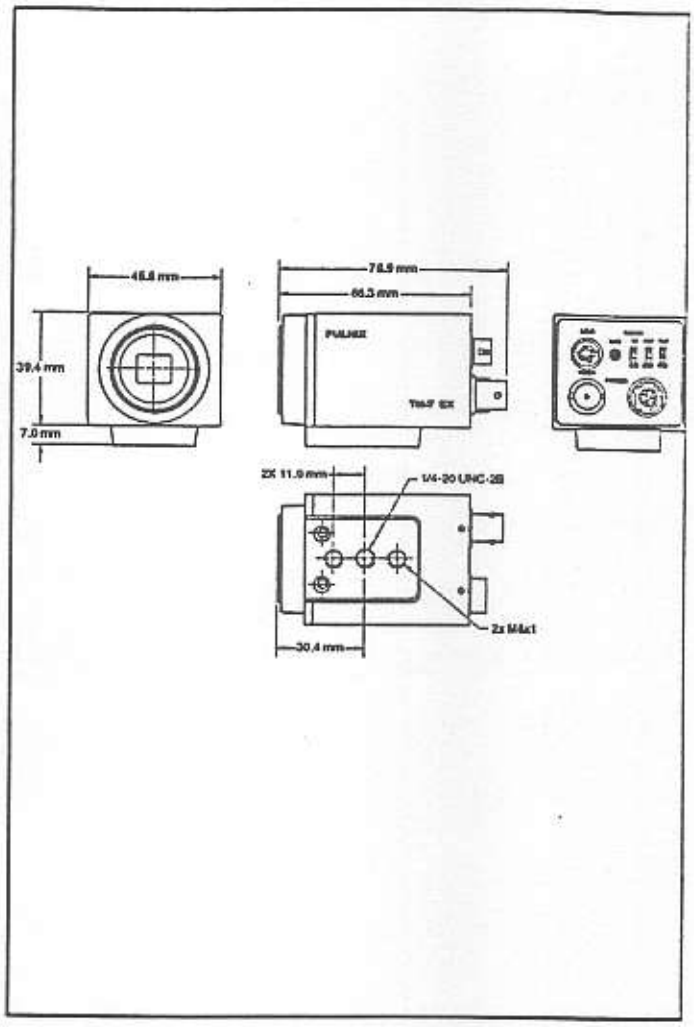

3.3 TM-7/TM6

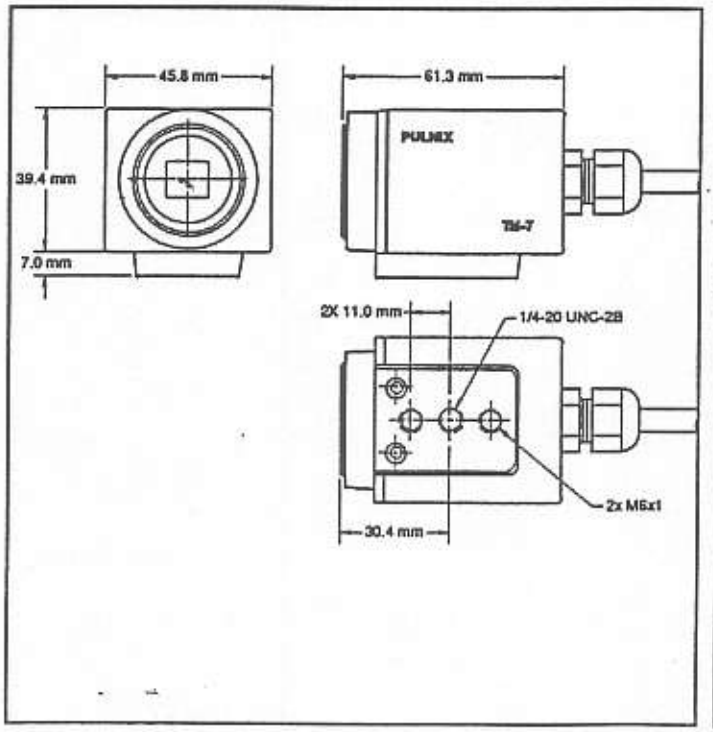

3.4 TM-7X/TM6X

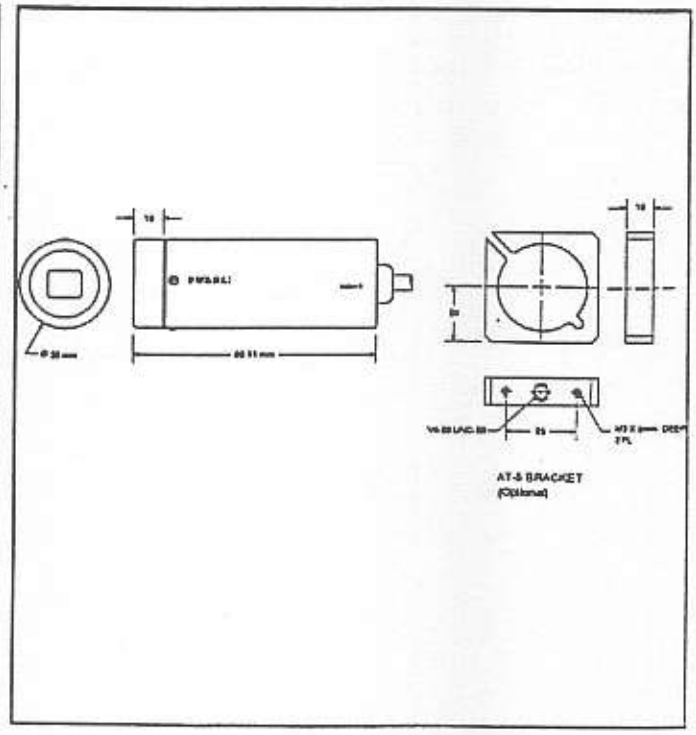

SECTION 4
CAMERA SYSTEM ACCESSORIES

The TM-7CN and TM-7EX consist of the camera body and the lens mount. Additionally, PULNiX offers the following accessories:

4.1 **SHUTTER CONTROL UNIT** (SC-745)- consists of a manually controlled 8-position BCD switch that determines the exposure time of the sensor. It connects to the TM-7CN/TM-7EX via a cable with a PC-6P male connector that plugs into the 6-pin female connector socket on the back of the camera. The SC-745 shutter control is included with the camera. The TM-7 and TM-7X do not accept an external shutter control.

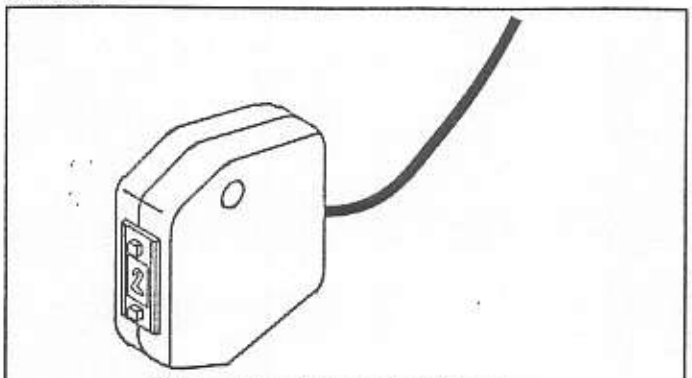

SC-745 SHUTTER CONTROL

4.2 **POWER CABLES** - all power cables use a PC-12P female connector that fits into the 12-pin male connector on the back of the TM-7CN/TM-7EX camera. Due to the connector's miniature size, PULNiX recommends purchasing the following pre-assembled cables: KC-10 10 feet, 4 conductor cable (12V, GND); 12POX Variable length, 8 conductor cable (12V, GND, Video, Clock out, Sync out, Async Vinit input I)

Note: Consult PULNiX for custom cable assemblies.

Connectors and cables

		CABLE (TM-7X)
1	GND	Gray
2	+12VDC	Yellow
3	GND	Red coax shield
4	Video	Red coax
5	GND	Orange coax shield
6	Sync out ("CN", "X") H_D in ("EX")	Orange coax
7	Clock out*1 ("CN", "X") V_D in ("EX")	Black coax
8	N/C	White shield (N/C *2)
9	Vinit in	White coax
10	N/C	Brown (5V)
11	N/C	Blue (D2*3 .1/1000 sec)
12	GND	Black coax shield

*1 28.6363 MHz external clock input (RV option)
*2 Auto-iris control output optional
*3 Any shutter speed combination is available

The TM-7/TM-6 are mainly designed for custom length cables and PULNiX can assemble mating connectors for each customer's system connection.

4.3 **LENSES** - PULNiX offers a wide variety of 2/3 inch format mini lenses. Auto-iris lenses must have a cable equipped with a PC-6P connector mating into the 6-pin female connector on the back of the camera.
Note: Normally, the TM-7CN and TM-7EX series cannot do variable shuttering while using an auto-iris lens because these functions share one 6-pin socket. The user has to build his own interface in order to use both an auto-iris lens and a shutter control switch. This is done by separating the +12VDC, GND and video wires (for the auto-iris lens), and the D_0, D_1, and D_2 controls (for the BCD switch).

4.4 **POWER SUPPLIES** - PULNiX recommends the following supplies:

K25-12	110V AC/12V DC,	2.1A power supply
P-15-12	220V AC/12V DC,	2.1A power supply
K50-12	110V AC/12V DC,	4.2A power supply
PD-12P	110V AC/12V DC,	0.5A power supply

SECTION 5 SETUP AND OPERATION

The operation of the TM-7 series requires a lens (mini or standard C-mount), a 12V DC regulated power supply, power and video cable assemblies and, if needed, a shutter control unit. Setup of the camera system is as follows:

5.1 **GETTING STARTED** - Please begin by checking your order to assure that you have received everything as ordered, and that nothing has been overlooked in the packing materials. It is a good idea to retain the original packing cartons for cameras and lenses should there be a need at a later date to return or exchange an item. It is also recommended that any equipment being sent to another location for field installation be bench tested to assure that everything is fully operational as a system. The following steps outline the setup procedure for PULNiX cameras.

5.2 **POWER SUPPLY AND POWER CABLE SETUP**
The TM-7CN/6CN and TM-7EX/6EX cameras use a 12-pin connector for power input. Consult the data sheet packed with your camera. Generally Pin #1 is Ground and Pin #2 is +12V DC. The other pins may handle a number of other input and output functions; this will be discussed in subsequent sections. For users simply providing power through the 12-pin connector, the DC-12P and PD-12P power supplies are available with the 12-pin mating connector already attached to the leads from the power supply. For those using the PULNiX power cables such as the 12P-02,

KC-10, etc., be certain that unused leads are not touching and that there is no possibility that leads can short because of exposed wire (s).

The power connector may now be attached to the camera. The 12-pin power connector is keyed and will only fit in one orientation. Rotate the connector while applying slight pressure until the keyways line up. You may now press the connector into place until firmly seated.

The 110V AC line cord may now be placed in the mains recepticle, and the camera is now powered up.

5.3 ATTACHING THE VIDEO OUTPUT

Most users utilize the BNC connector on the "CN" and "EX" versions for video output from the camera. Connect the output from the camera to the input of your monitor, VCR, or switching device. The input of the monitor should be balanced for 75Ω termination. Standard RG-59 type coaxial cable should carry a full video signal for up to 500 feet.

The mini coaxial leads in PULNiX multi-conductor cables attached to the TM-7/6 and TM-7X/6X versions are designed for short runs of not longer than 100 feet. See the pinout and color code information in Section 2 for wiring. Be certain that no extraneous wires are visible which could cause a short.

5.4 LENSES

C-mount lenses are attached to the camera by carefully engaging the threads and rotating the lens clockwise until it firmly seats on the mounting ring. Do not force the lens if it does not seat properly. Some lenses with extremely long flangebacks may exceed the mounting depth of the camera. The TM-7 series cameras use 1/2" format lenses.

5.4.1 BACK FOCUSING LENSES

To backfocus the TM-7, TM-7CN, TM-7EX cameras, first attach a C-mount lens in the mount. Be certain that the lens is properly seated. Next set the lens focus to infinity (and if the lens is a manual iris, set the iris to a high f number while still retaining a well illuminated image). Try to obtain the best focus at this setting. Then loosen the two miniature hex head set screws locking the focus ring in place. Now turn the entire lens and focus ring assembly back and forth until the best image is obtained. This will set your backfocus. Once the best image is obtained, tighten the focus ring set screws. TM-7X/-6X cameras do not have a provision for back focus.

5.4.2 AUTO-IRIS LENS SETUP

Power down the camera before attaching auto-iris lens. Mount the auto-iris lens following the instructions above. Plug the connector provided on the lens into the connector on the rear of the camera marked AUTO-IRIS or simply LENS. You may now power up the camera. Point camera at a light area and then quickly towards a darker area. If everything is working properly, the iris should adjust for the light change. Auto-iris lenses which operate with full video input can be used with the TM-7 and TM-7X; however no auto-iris input is supplied. Wire lens into terminal with output leads from camera.

NOTE: There is a small chance that damage could occur to the auto-iris lens by plugging or unplugging the lens into the LENS connector on the camera while the camera is still powered up. It is a good idea to always remove power from the camera before connecting or disconnecting lens.

5.5 SHUTTER CONTROL SETUP

The TM-745 Shutter Controller is used to externally vary the shutter speed of the TM-7CN/-6CN and TM-7EX/-6EX. This controller plugs into the 6-pin connector on the rear of the camera normally used for auto-iris lenses. Switching the controller will obtain the desired shutter speed. See the key to controller speeds on the associated data sheet for the camera being shuttered. The SC-745 must remain attached to the camera to use the shutter feature of the camera unless the camera is specially modified to shutter internally. If at a single speed it is desired to use an auto-iris lens and SC-745 at the same time, a special 6-pin connector must be made up which breaks out the SC-745 and lens connections as separate outputs. See Section 6 for pin-outs and speed menu.

SECTION 6

TM-7/TM-6 SHUTTER OPERATION

The TM-7/TM-6 series has a substrate drain type shutter mechanism which provides a superb picture at various speeds without smearing.

6.1 BCD SHUTTER CONTROL

By selecting D0, D1, D2 level high or low, the following shutter speeds are obtained, PULNiX provides a shutter control (SC-745), but it is also easily controlled from a computer, remote control unit, or fixed at a specific speed.

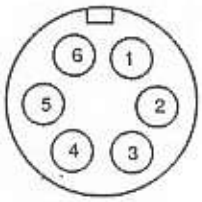

6 pin connector

1. D_2	4. +12V
2.GND	5. D_0
3. Iris	6. D_1

Control Setting	0	1	2	3	4	5	6	7
(sec)	1/60	1/125	1/250	1/500	1/1000	1/2000	1/4000	1/10000
D0	L	H	L	H	L	H	L	H
D1	L	L	H	H	L	L	H	H
D2	L	L	L	L	H	H	H	H

6.2 SUBSTRATE DRAIN SHUTTER MECHANISM

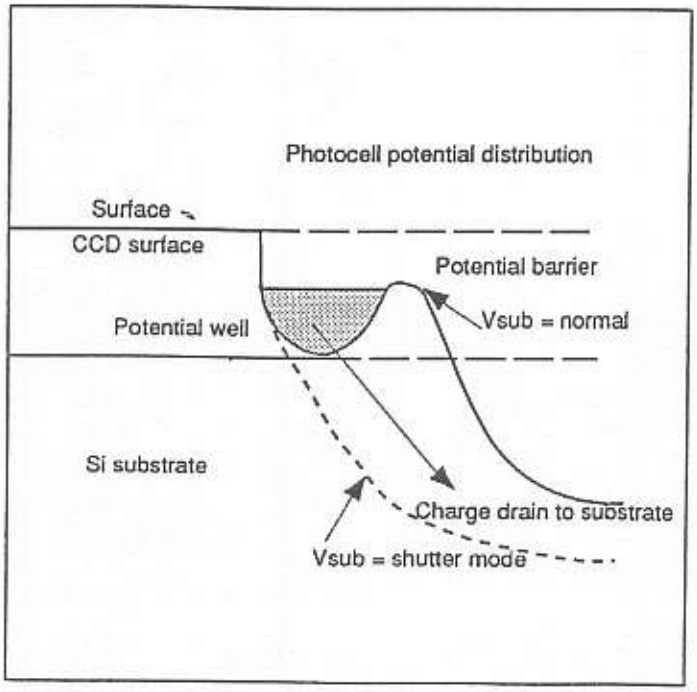

Normal operation requires the CCD chip to construct an individual potential well at each image cell. These potential wells are separated from each other by a barrier. The barrier is sequentially removed to transfer the charge from one CCD to another by the pixel clock. This is the basic principle of CCD operation for interline transfer. The substrate drain vertically moves the charges. When excess potential is applied to the substrate underneath each cell, a potential barrier is pulled down to release the charge into the drain. This can happen to all the cells simultaneously, whereas normal CCD shuttering is done with a horizontal charge shift to the drain area by interline transferring or reverse transferring of the frame transfer chip. The discharge of the TM-7/TM-6 chip is done in the horizontal blanking interval.

Note: Vertical resolution of shutter mode is one field (244). Full frame shutter is not available. If the object is motionless, the interlace signal (2 fields) can generate full vertical resolution.

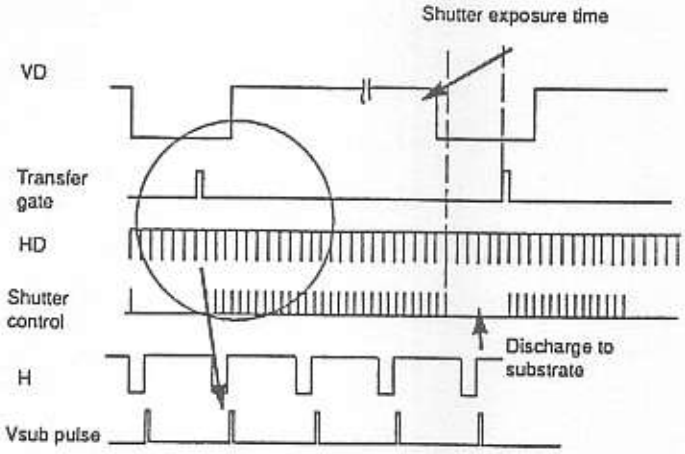

6.3 SYNC OUTPUT AND CLOCK OUTPUT

TTL level internal sync and buffered pixel clock output (14.31818MHz) are available from TM-7 series cameras.

The signal is an emitter follower output and it requires **a termination resistor at end of cable.**

The suggested value is from 75Ω to 330Ω. This is especially important for the TM-7 / TM-6 because of the cable.

RV option: In order to control camera clock, external clock can be supplied as an (Option 7). The standard speed is 28.63 MHz. (40MHz max. and 1MHz min.)

SECTION 7
CCD CHARACTERISTICS AND OPERATION

7.1 THEORY OF OPERATION (Operation principle of the CCD)

A CCD (Charge Coupled Device) consists of MOS (Metal-Oxide-Semiconductor) capacitors arranged in a regular array. It basically performs three functions connected with handling charges:

1. Photoelectric conversion (photosensor).
Incident light generates charges on the MOS capacitors, with the quantity of charge being proportional to the brightness.

2. Accumulation of charges.
When a voltage is applied to the electrodes of the MOS capacitors, an electric potential well is formed in the silicon layer. The charge is accumulated in this well.

3. Transmission of charge
When a high voltage is applied to the electrodes, a deeper well is formed; when a low voltage is applied, a shallower well is formed. In the CCD, this property is used to transmit the charge. When a high voltage is applied to the electrodes, a deep electric potential well is formed, and charge flows in from a neighboring well. When this is repeated over and over among the regularly arranged electrodes, the charge is transferred from one MOS capacitor to another. This is the principle of CCD charge transmission.

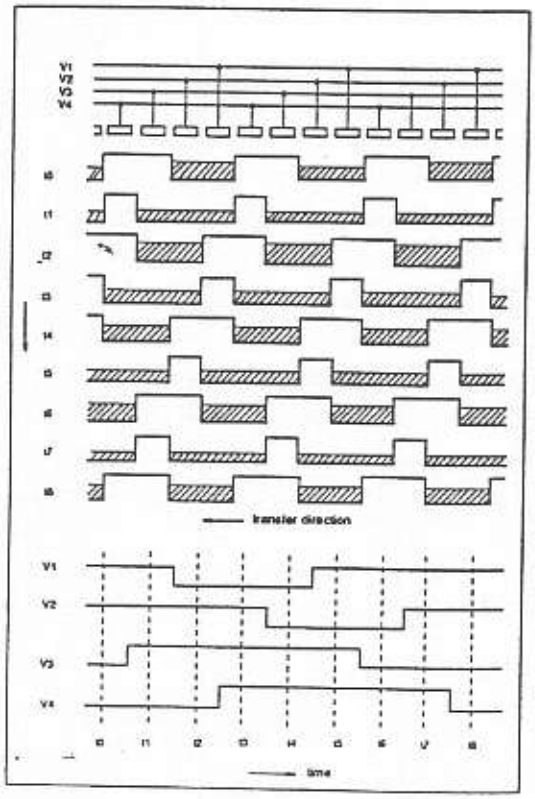

7.2 MECHANISM OF CCD CHARGE TRANSFER

1. Vertical transfer
The vertical shift register transfers charges using a four-phase drive mode. Figure 1 shows an example of the changes which can occur in potential wells in successive time intervals. At t0, the electrode voltages are (V1 = V2)>(V3 = V4), so the potential wells are deeper toward the electrode at the higher voltages V1 and V2. Charges accumulate in these deep wells. At t1, the electrode voltages are (V1 = V2 = V3)>(V4), so the charges accumulate in the wells toward the electrode at V1, V2 and V3. At t2, the electrode voltages are (V2 = V3)>(V4 = V1), so the charges accumulate in the wells toward the electrode at V2 and V3. Electrode voltage states at t3 and after are shown below.

t3(V2 = V3 = V4)>(V1)
t4(V3 = V4)>(V1 = V2)
t5(V4>(V1 = V2 = V3)
t6(V4 = V1)>(V2 = V3)
t7(V4 = V1 = V2)>(V3)
t8(V1 = V2)>(V3 = V4) (Initial state)
These operations are repeated to execute the vertical transfer.

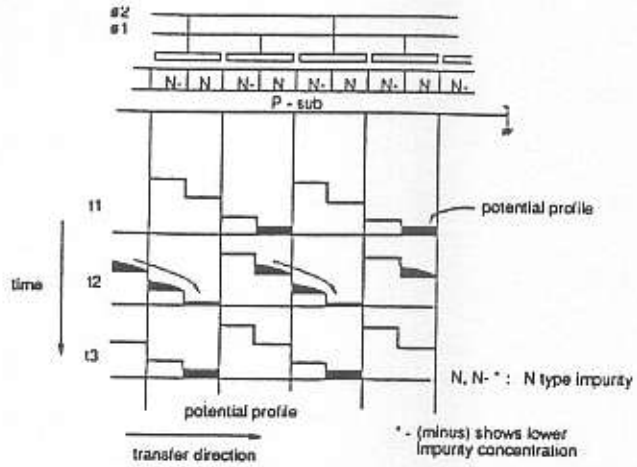

Operating Pulse Waveforms (φ1, φ2 or φH1, φH2)

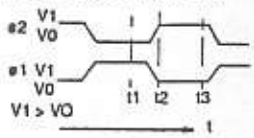

2. Horizontal transfer
The horizontal shift register transfers charges using a two-phase drive mode. Figure 2 shows an example of the changes which can occur in the potential wells in successive time intervals. At t1, the electrode voltages are H1>H2, so the potential wells are deeper toward the electrode of the higher voltage H1. The charges accumulate in these wells. At t2, the electrode voltages H1 and H2 are inverted, the wells toward the electrode at voltage H2 become deeper while the wells toward the electrode at voltage H1 become shallower. So the wells at H2 are deeper than those at H1, the charge flows into the deeper wells toward the electrode

at H2. At t3, the electrode voltage has not changed since t2, so the charge flows into the wells at H2 and one transfer of charge is completed. These operations are repeated to execute the horizontal transfer.

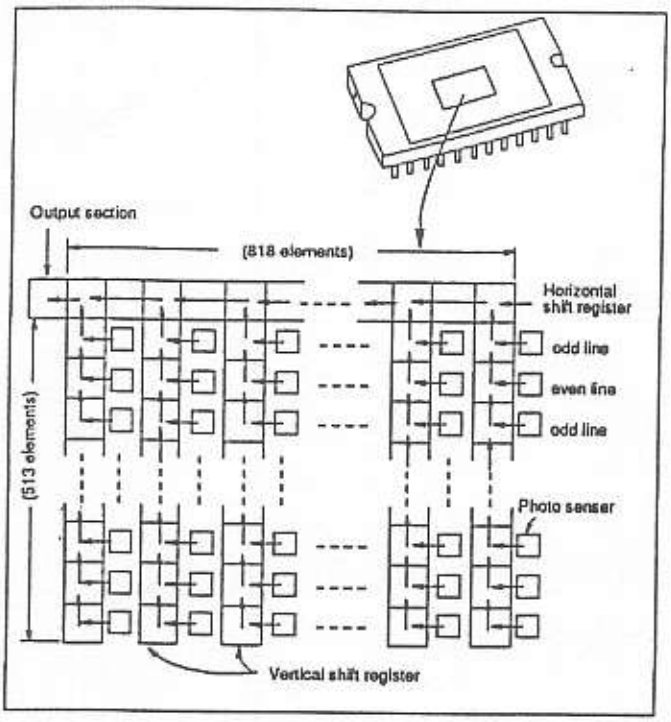

7.3 SPECTRAL RESPONSE

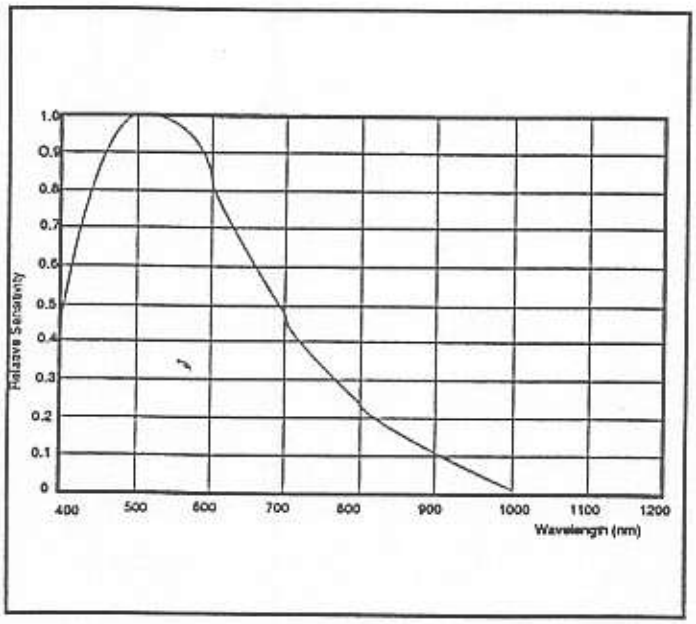

7.4 FIELD MODE AND FRAME MODE

Standard factory setting for this mode selection is FIELD MODE.

The difference of these two modes is as follows,

FRAME MODE

It scans each horizontal row as interlace scanning. During FRAME MODE, integration of each pixel is one frame period (32msec ...EIA, 40msec...CCIR). Vertical pixel resolution is good and exact location is obtained. It tends to show vertical Moire. For strobe lighting, it must use FRAME MODE in order to achieve full frame resolution.

FIELD MODE

It scans two horizontal rows together and changes the pair at each interlace scanning.

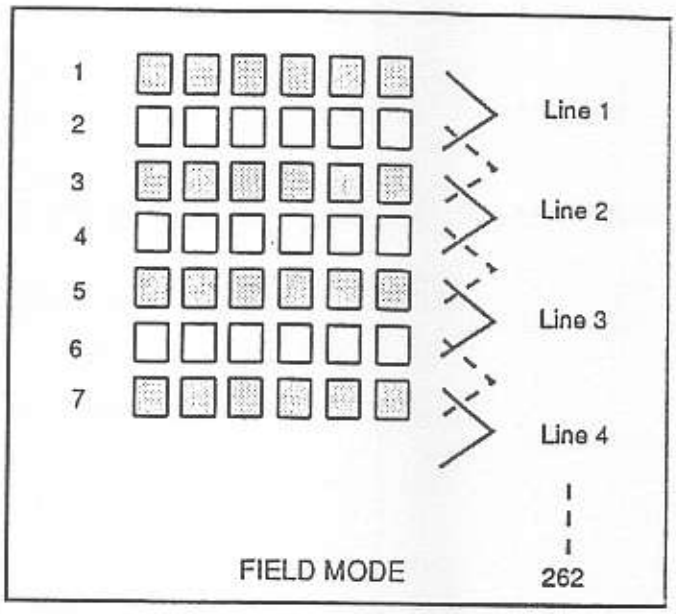

This mode has advantages when the shutter is often used as the sensitivity of the CCD is doubled for one field of integration (For shutter, integration can not exceed one field) therefore, it can obtain the same sensitivity as the FRAME MODE for half of the period. Because of alternating two row scanning, Moire is almost unnoticable and even though the vertical resolution is not as good as in FRAME MODE it is sufficient to see the full vertical resolution of the TV format.

FIELD MODE can not provide full frame resolution with strobe lighting application.

NOTE: The factory setting for the TM-7 series cameras is FIELD MODE. If FRAME MODE is required please contact PULNiX for the setting.

The mode selection is solder jumper on the process board.

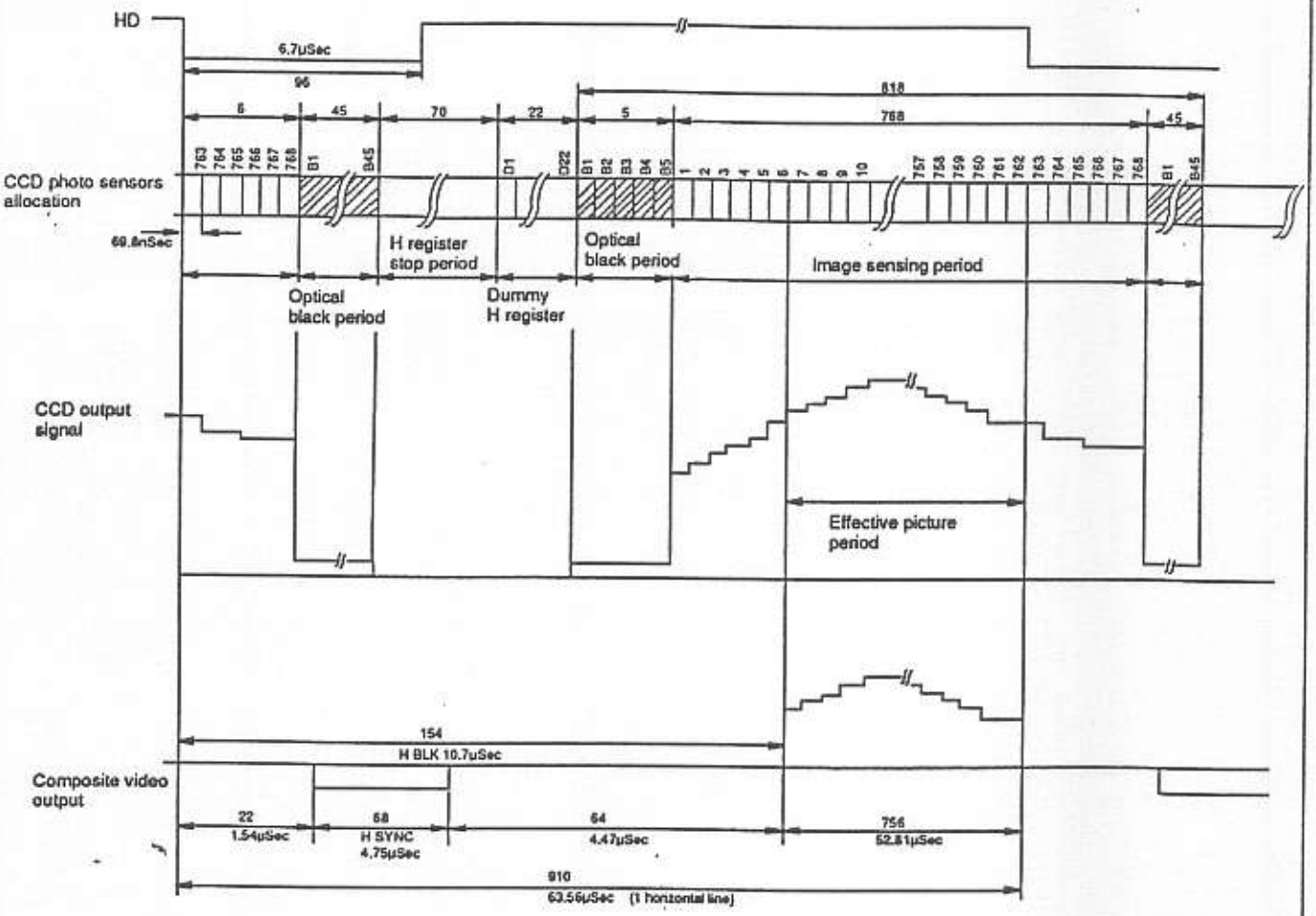
HD
6.7µSec
96
818
6
45
70
22
5
768
45
CCD photo sensors allocation
69.8nSec
H register stop period
Optical black period
Image sensing period
Optical black period
Dummy H register
CCD output signal
Effective picture period
154
H BLK 10.7µSec
Composite video output
22
1.54µSec
68
H SYNC 4.75µSec
64
4.47µSec
756
52.81µSec
910
63.56µSec (1 horizontal line)

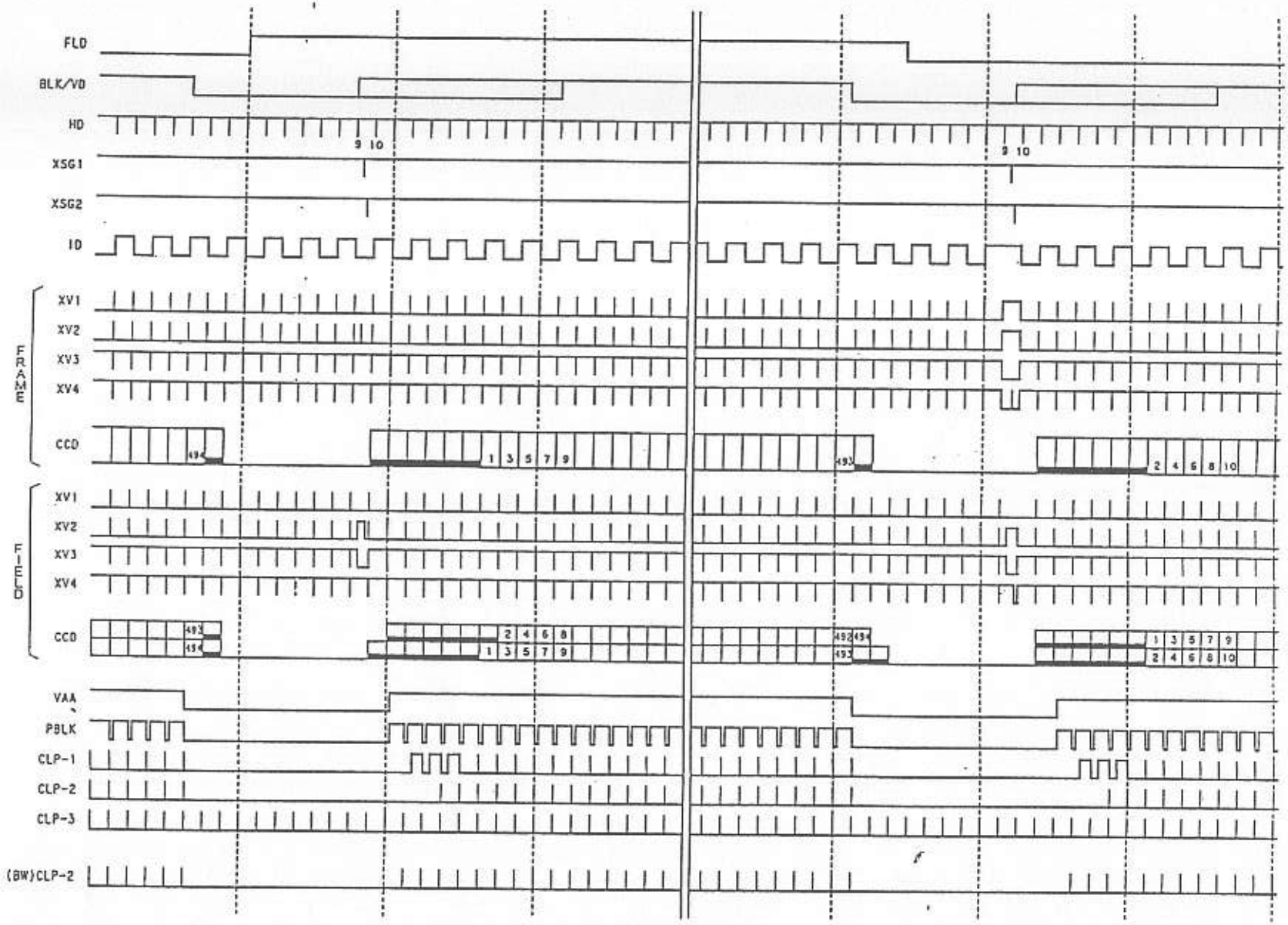

NTSC Vertical Pulse Drawing

NTSC Horizontal Pulse Drawing

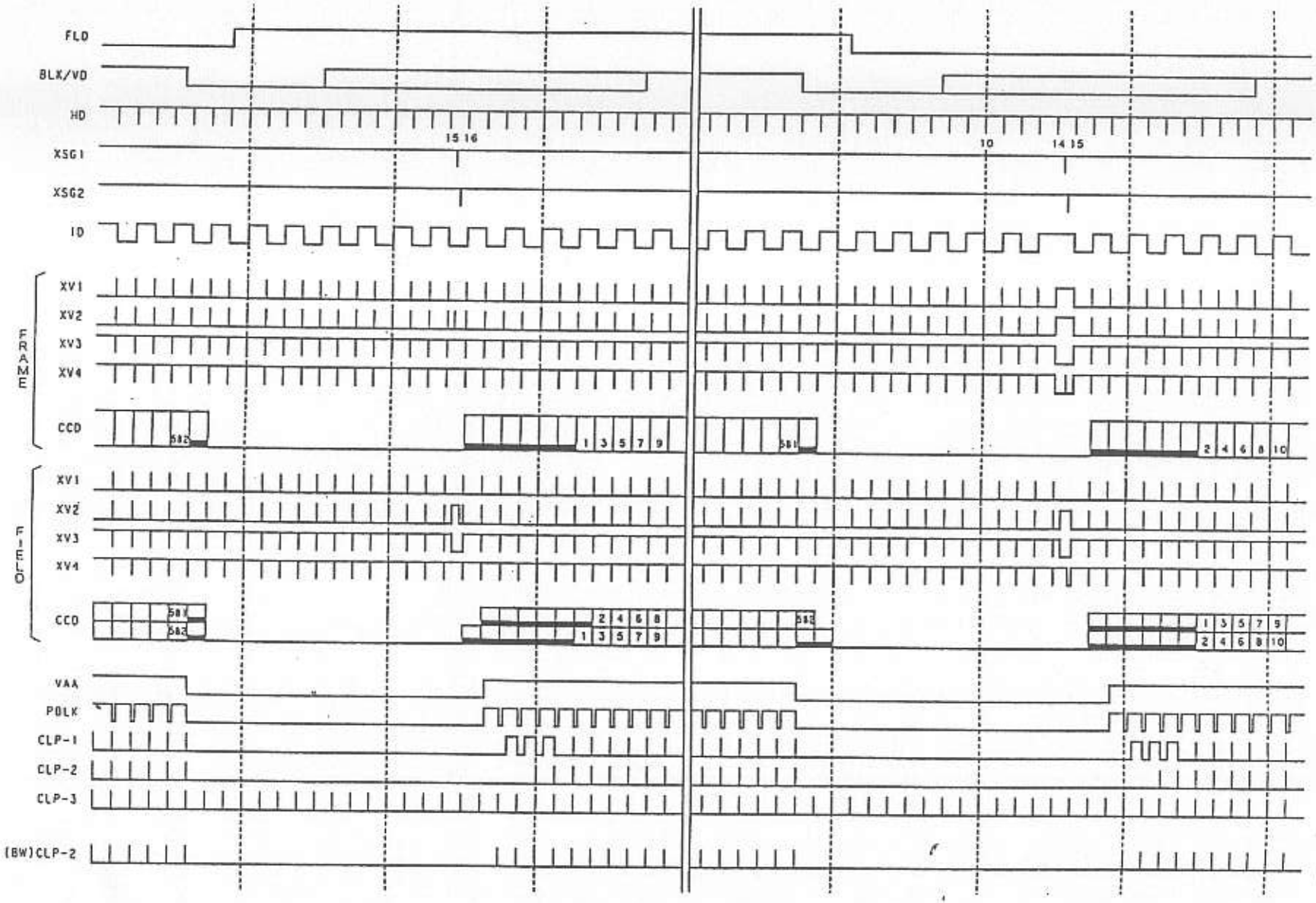

PAL Vertical Pulse Drawing

PAL Horizontal Pulse Drawing

SECTION 9
TM-7/TM-6, TM-7CN/TM-6CN,
TM-7X/TM-6X ADJUSTMENT PROCEDURE

9.1 Power and Sync Gen board

Apply +12V DC to pin 8 and GND (#6).
Measure 15V (pin#5) , VL=-9V (pin#7).

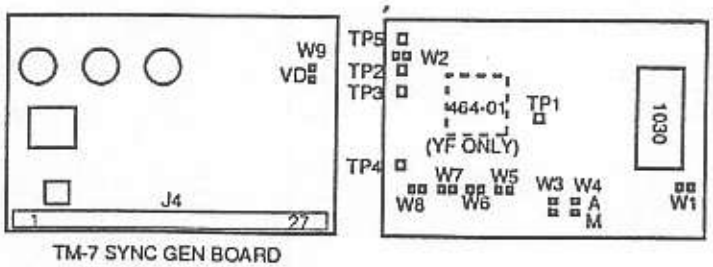

TM-7 SYNC GEN BOARD

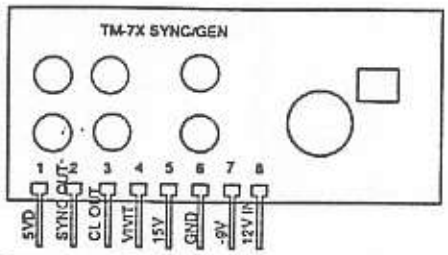

Standard TM-7CN/EX

	Jumper setting	standard	YF
W1	EIA/CCIR selection		
W2	Async	Short	Open
W3	Async mode	N/A	
W4	Async/Man shutter	N/A	
W5 -W8	test jumper		
W9	VD in	Short	Open
W10	Vinit selection	Open	Short

9.2 Imager Board (TM-7/TM-6, TM-7EX/6EX, TM-7CN/TM-6CN)

Use the TM-7 imager board test jig and check all imager functions. Adjust Vsub voltage to specified value on the imager back.

E	9.0V	F	9.5V
G	10.0V	H	10.5V
J	11.0V	K	11.5V
L	12.0V	M	12.5V
N	13.0V	P	13.5V
Q	14.0V	R	14.5V
S	15.0V	T	15.5V
U	16.0V	V	16.5V
W	17.0V	X	17.5V
Y	18.0V	Z	18.5V

9.3 Processor Board

Step 1. Apply +5V to 5D (pin#1) and confirm clock output.
Step 2.Use test jig and check functions. It should operate at full function of video output.

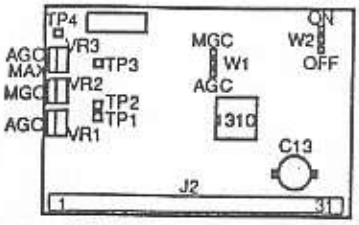

TM-7 PROCESSOR BOARD

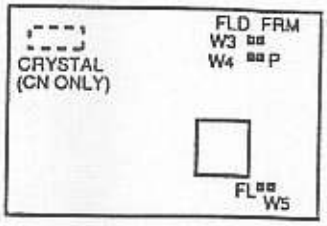

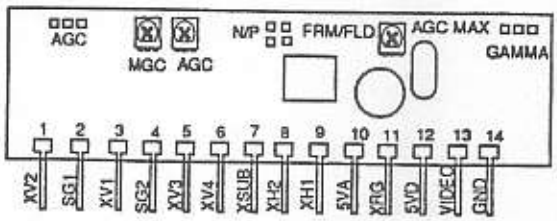

TM-7X PROCESSOR BOARD

9.3.1 AGC

Adjust VR1 (AGC) so that TP1 is 2.0 V

9.3.2 MGC

Set VR2 (MGC) at mechanical center (2.5V at TP2).

Mechanical center

9.3.3 AGC MAX.

Adjust VR3 (AGC MAX) to 2.0V at TP3.
Re-set AGCMAX at final calibration. See calibration specification.

9.4 Jumper Setting

For testing each board, set the jumpers as follows:

		EIA	CCIR
POWER	W1	none	P
DRIVER		none	P
PROCESS	W1	AGC OFF	AGC OFF
	W2	GAMMA 1	GAMMA 1
	W3	FIELD (Open)	FIELD

After assembly the factory setting is,

TM-7/TM-6	AGC ON, GAMMA=1
TM-7X/TM-6X	AGC ON, GAMMA=1
TM-7CN/TM-6CN	NO JUMPERS ON AGC AND GAMMA
TM-7EX/TM-6EX	Switch set is AGC 0FF GAMMA=1

External Sync version TM-7EX/TM-6EX

10.1 External Sync Specification

Sync	Internal/External auto-switching
HD in	fHD = 15.734 KHz ± 5 % (EIA)
	fHD = 15.625 KHz ± 5 % (CCIR)
VD in	fVD = 59.94 Hz ± 5 % (EIA)
	fVD = 50.0 Hz ± 5 % (CCIR)

Input impedance 330Ω
75Ω (optional)

See connector board R1,R2,R3 for termination resistors.

10.2 Connector Pin Configurations

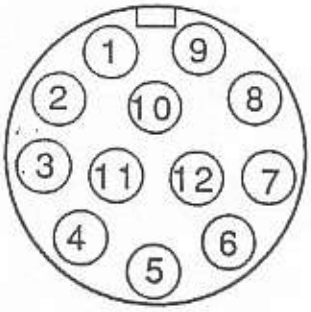

	TM-7EX/TM-6EX	S-option
1	GND	GND
2	+12V IN	+12VIN
3	GND	GND
4	VIDEO OUT	VIDEO OUT
5	N/C	N/C
6	Vinit in	HD IN
7	VD IN	VD IN
8	N/C	N/C
9	HD IN	VINIT IN
10	N/C	N/C
11	N/C	N/C
12	N/C	N/C

10.3 Asynchronous Reset (STANDARD)

Asynchronous reset is available in all models. By providing reset input to Vinit pin, the TM-7 series camera can reset the scanning within 1 µsec. The reset is done for HD and VD together.
The reset pulse is TTL level and the negative going edge is the reset timing.
This feature is especially useful for strobing applications which generate full frame resolution at random reset. The captured image is always consistent with the order of odd and even fields. Asynchronous reset also eliminates "ghost image" which is caused by an overflow of charges when strong strobe lighting is applied during the middle of imager scanning.

Asynchromous reset and asynchronous shutter:
Please refer YF instruction

10.4 Phase Adjustment

TM-7EX GENLOCK BOARD

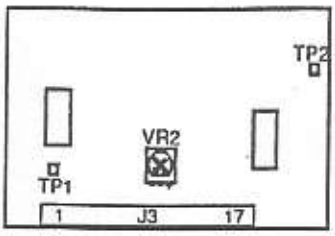

TM-7 GENLOCK BOARD

Horizontal lock
Apply HD to Genlock board and probe internal HD. Both External HD and Internal HD phase should line up. Observe jitter. It must be less than 20 nsec. Adjust VR2 to set the phase lock level so that TP1 DC level is 5 V ± 1 V.

Vertical lock
Apply VD to genlock board and probe internal VD. Adjust VR1 for vertical phase adjustment. Both External and Internal VD should line up.

SECTION 11
CONNECTOR BOARD

11.1 Impedance selection

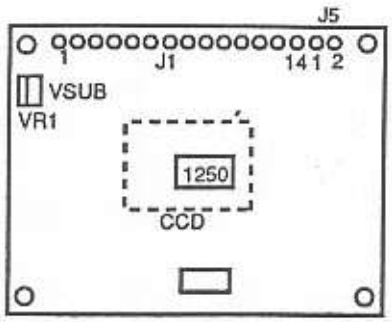

TM-7 IMAGER BOARD

Standard input/output impedance for Pins 6, 7 and 9 of 12 pin connector is as follows,

		TM-7 CN/TM-7	Option
Pin 6	Sync out	TTL (OPEN)	
Pin 7	Clock out	Emitter follower	50Ω on R2
Pin 9	Vinit in	300Ω R3	75Ω on R3

	TM-7EX		75Ω-option	S-option
Pin 6	Vinit in	Open	Open	75Ω HD in
Pin 7	VD in	300Ω R2	75Ω R2	75Ω R2
Pin 9	HD in	300Ω R3	75Ω R3	Vinit(Open)

11.2 Jumper setting

	TM-7CN	TM-7EX	S-0ption
W1	Short	Open	Open
W2	Short	Open	Open
W3	N/A	T side	S side
W4	T.C side	T.C side	S side

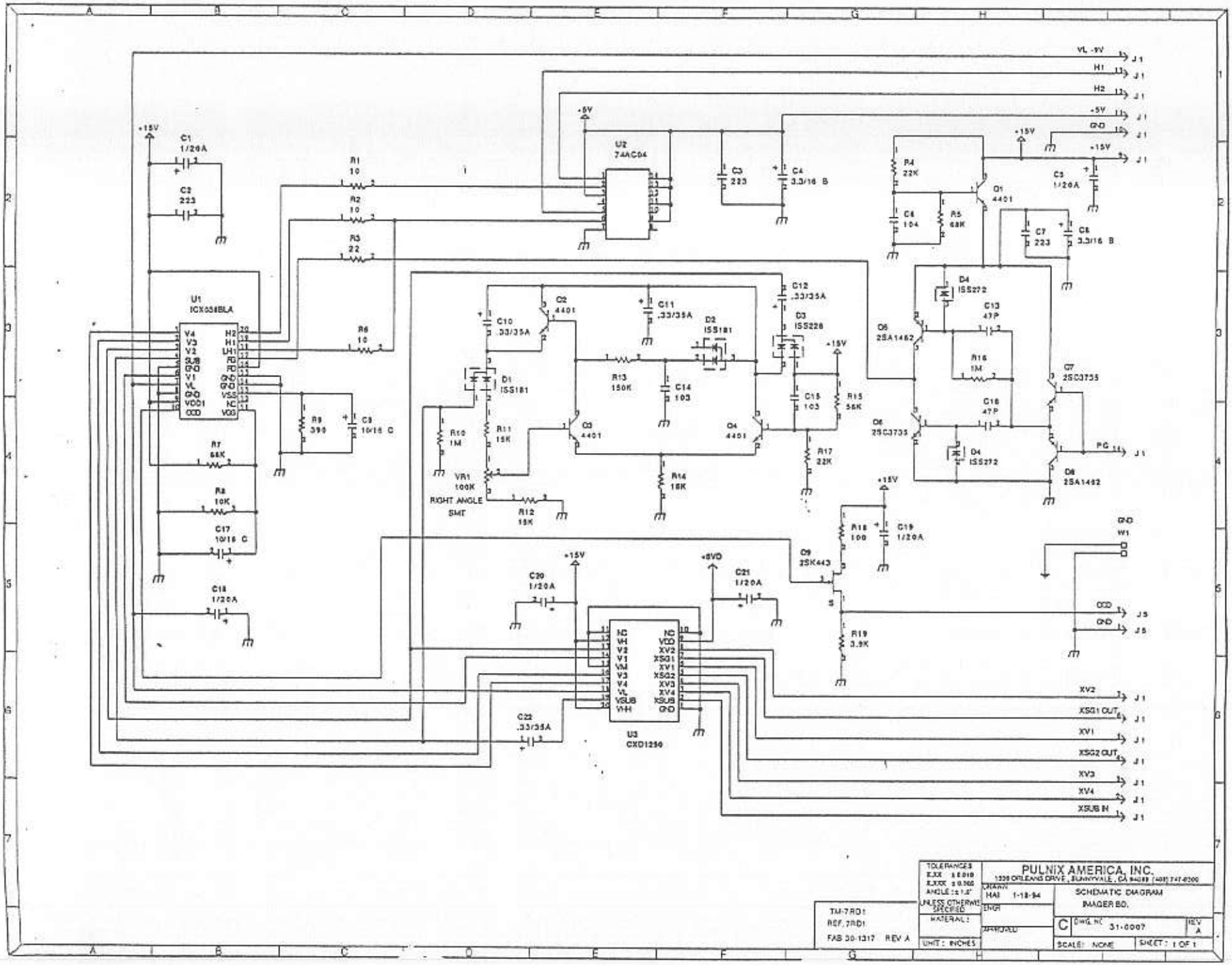
VL -9V
H1
H2
+5V
GND
+15V
U1
ICX058BLA
U2
74AC04
U3
CXD1250
Q1
4401
Q2
4401
Q3
4401
Q4
4401
Q5
2SA1462
Q6
2SC3735
Q7
2SC3735
Q8
2SA1462
Q9
2SK443
D1
ISS181
D2
ISS181
D3
ISS228
D4
ISS272
VR1
100K
RIGHT ANGLE
SMT
PG
XV2
XSG1 OUT
XV1
XSG2 OUT
XV3
XV4
XSUB IN
TM-7RD1
REF. 7RD1
FAB 30-1317 REV A
TOLERANCES
UNLESS OTHERWISE SPECIFIED
MATERIAL:
UNIT: INCHES
PULNIX AMERICA, INC.
1330 ORLEANS DRIVE, SUNNYVALE, CA 94089 (408) 747-0300
DRAWN HAI 1-18-94
ENGR
APPROVED
SCHEMATIC DIAGRAM
IMAGER BD.
C
DWG. NO 31-0007
REV A
SCALE: NONE
SHEET: 1 OF 1

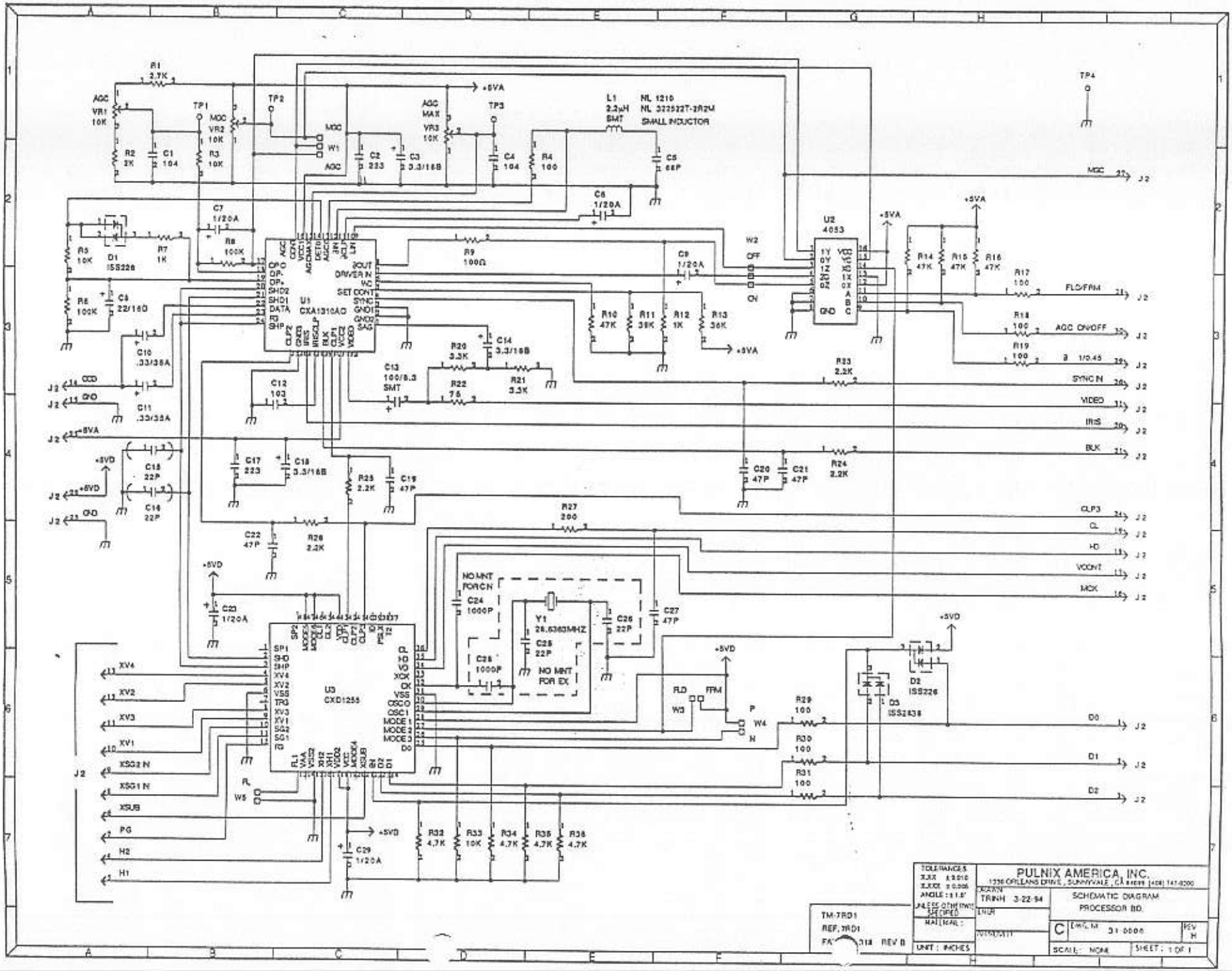
PULNIX AMERICA, INC.
SCHEMATIC DIAGRAM
PROCESSOR BD.
SCALE: NONE
SHEET: 1 OF 1
U1 CXA1310AQ
U2 4053
U3 CXD1255
Y1 26.6363MHZ
L1 2.2µH SMT
NL 1210
SMALL INDUCTOR
NO MNT FOR CN
NO MNT FOR EX
+5VA
+5VD
GND
MGC
AGC
FLD/FRM
AGC ON/OFF
SYNC IN
VIDEO
IRIS
BLK
CLP3
CL
HD
VCONT
MCK
D0
D1
D2
XV4
XV2
XV3
XV1
XSG2 N
XSG1 N
XSUB
PG
H2
H1

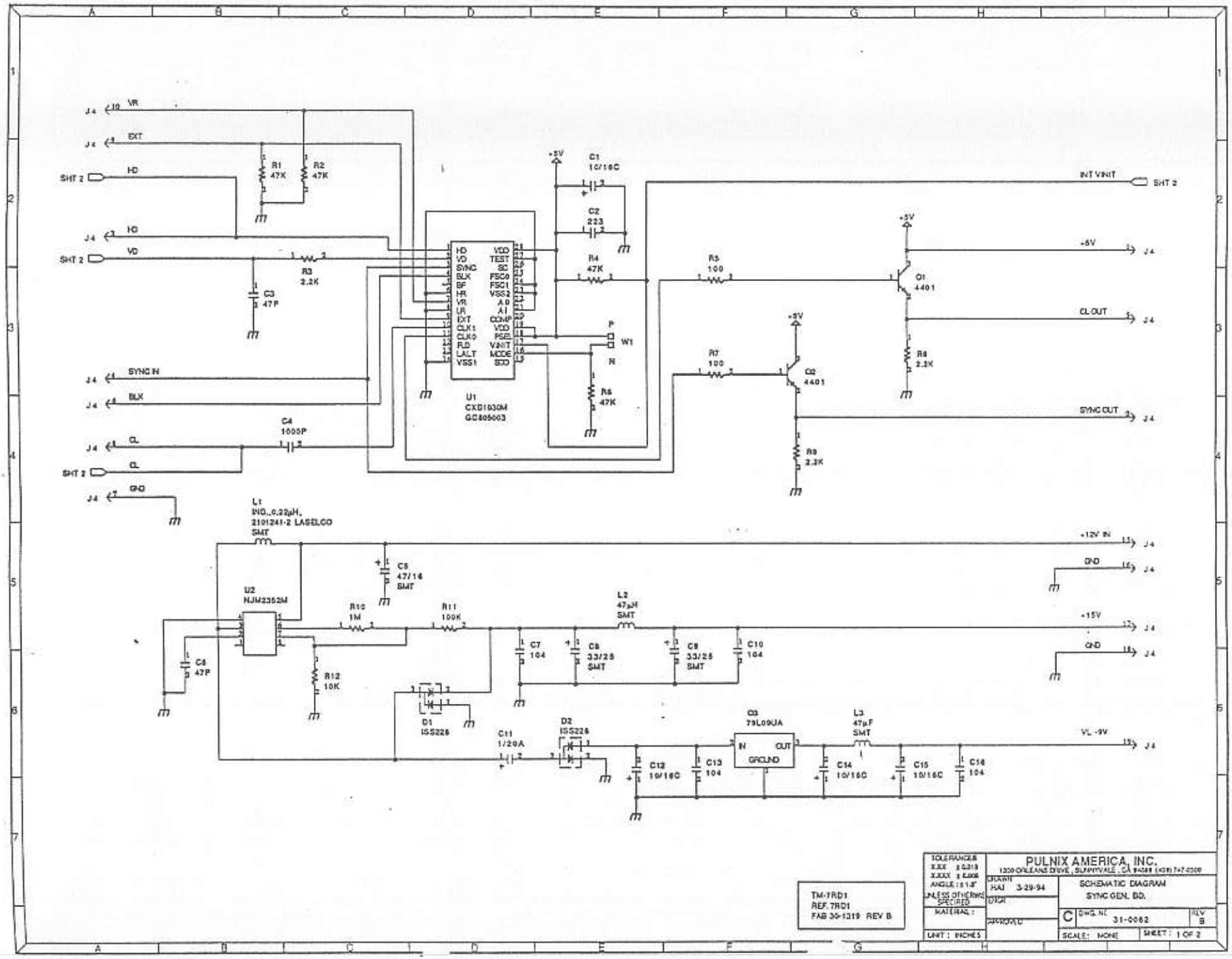
J4 10 VR
J4 9 EXT
SHT 2 HD
J4 3 HD
SHT 2 VD
R1 47K
R2 47K
R3 2.2K
C3 47P
J4 SYNC IN
J4 BLK
J4 CL
SHT 2 CL
J4 GND
C4 1000P
+5V
C1 10/16C
C2 223
R4 47K
R5 100
R7 100
R6 47K
U1 CXD1630M GC805003
HD VD SYNC BLK BF HR VR LR EXT CLK1 CLK0 RLD LALT VSS1
VDD TEST SC FSC0 FSC1 VSS2 A0 A1 COMP VDD FSE VINIT MODE SCO
P W1 N
INT VINIT SHT 2
+5V J4
CL OUT J4
SYNC OUT J4
Q1 4401
Q2 4401
R8 2.2K
R9 2.2K
L1 IND.,0.22μH, 2101241-2 LASELCO SMT
U2 NJM2352M
C5 47/16 SMT
R10 1M
R11 100K
R12 10K
C6 47P
L2 47μH SMT
C7 104
C8 33/25 SMT
C9 33/25 SMT
C10 104
+12V IN J4
GND J4
+15V J4
GND J4
D1 ISS226
D2 ISS226
C11 1/20A
C12 10/16C
C13 104
C3 79L09UA
IN OUT GROUND
L3 47μF SMT
C14 10/16C
C15 10/16C
C16 104
VL -9V J4
TM-7RD1
REF. 7RD1
FAB 30-1319 REV B
TOLERANCES
XXX ±0.010
XXXX ±0.005
ANGLE: ±1.0°
UNLESS OTHERWISE SPECIFIED
MATERIAL:
UNIT: INCHES
PULNIX AMERICA, INC.
1330 ORLEANS DRIVE, SUNNYVALE, CA 94089 (408) 747-0300
DRAWN HAI 3-29-94
CHK'D
APPROVED
SCHEMATIC DIAGRAM
SYNC GEN. BD.
C
DWG. NO 31-0062
REV B
SCALE: NONE
SHEET: 1 OF 2

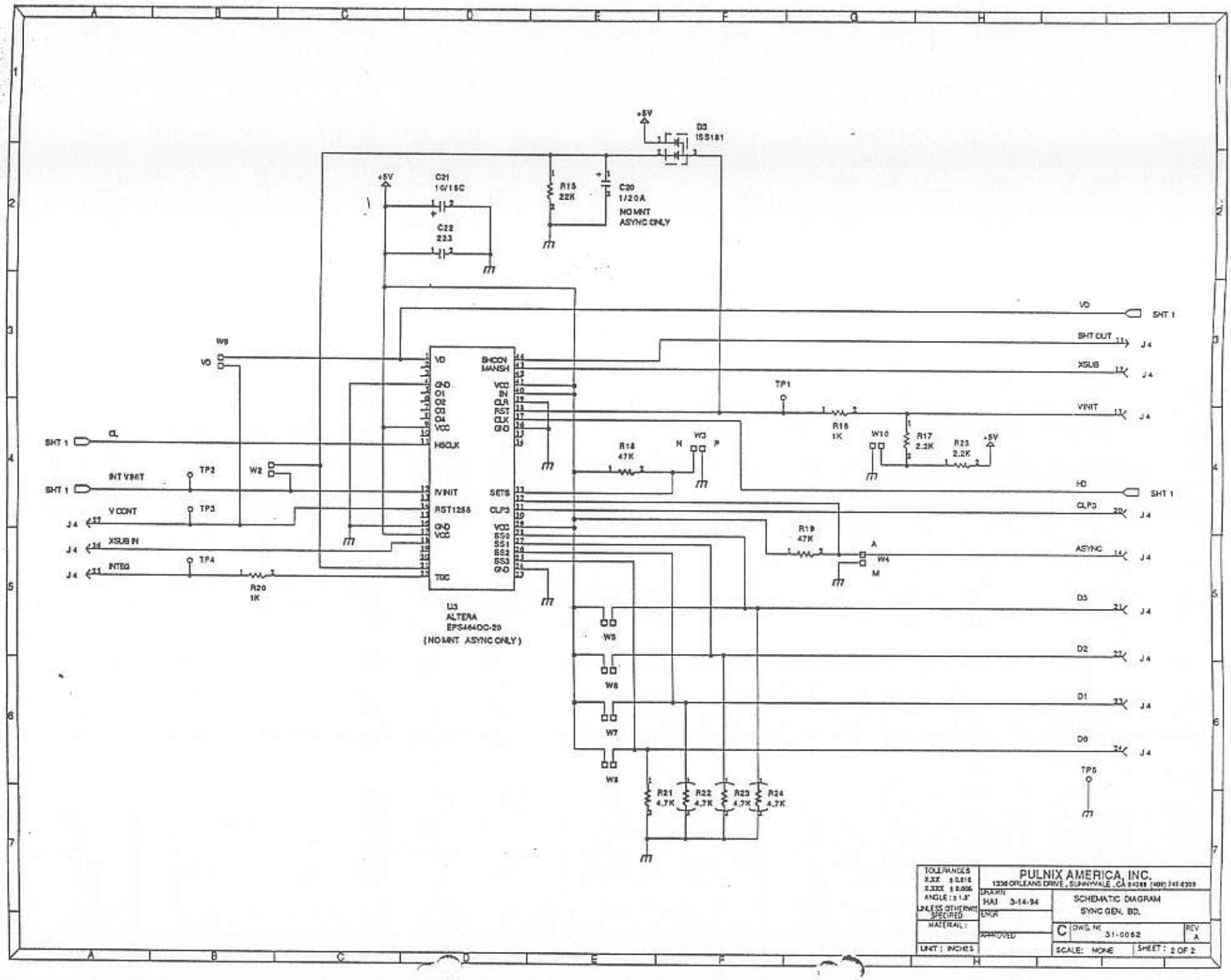

TOLERANCES X.XX ±0.010 X.XXX ±0.005 ANGLE: ±1.0° UNLESS OTHERWISE SPECIFIED	PULNIX AMERICA, INC. 1330 ORLEANS DRIVE, SUNNYVALE, CA 94089 (408) 747-0300	
	DRAWN HAI 3-14-94	SCHEMATIC DIAGRAM SYNC GEN. BD.
MATERIAL:	CHKD	
	APPROVED	C DWG. NO. 31-0062 REV A
UNIT: INCHES		SCALE: NONE SHEET: 2 OF 2

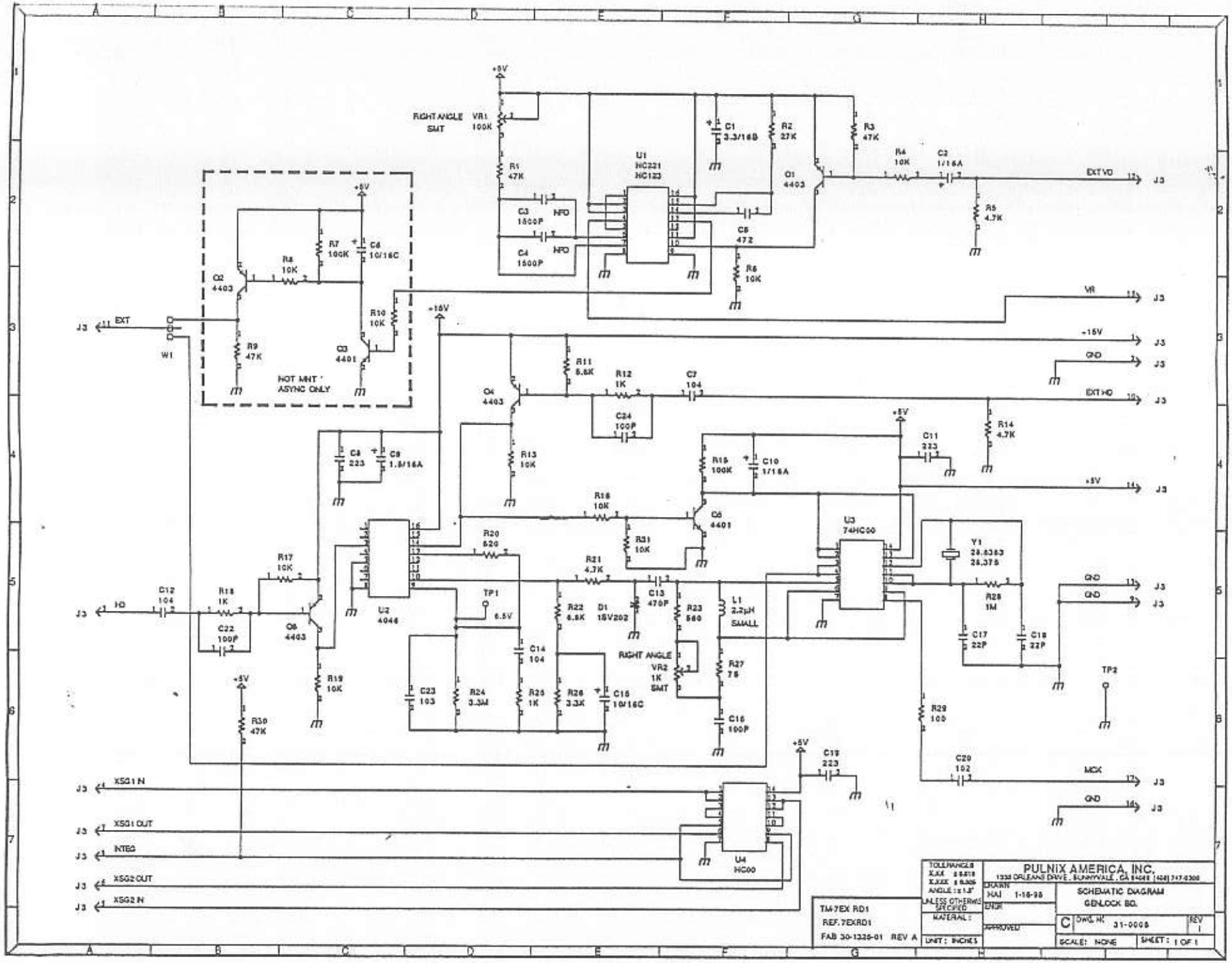
RIGHT ANGLE SMT
VR1 100K
R1 47K
C1 3.3/16B
R2 27K
R3 47K
U1 HC221 HC123
Q1 4403
R4 10K
C2 1/16A
EXTVD
J3
R5 4.7K
C3 1500P
NPO
C4 1500P
NPO
C5 472
R6 10K
VR
Q2 4403
R7 100K
C6 10/16C
R8 10K
R10 10K
Q3 4401
R9 47K
NOT MNT ASYNC ONLY
J3 EXT
W1
+15V
-15V
GND
R11 5.6K
R12 1K
C7 104
EXTHD
Q4 4403
C24 100P
R13 10K
C8 223
C9 1.5/16A
R15 100K
C10 1/16A
C11 223
R14 4.7K
+5V
R16 10K
Q5 4401
R31 10K
U3 74HC00
Y1 28.6363 28.375
R17 10K
R20 620
R21 4.7K
C13 470P
R28 1M
C12 104
R18 1K
C22 100P
Q6 4403
U2 4046
TP1
6.5V
R22 6.8K
D1 1SV202
R23 560
L1 2.2µH SMALL
C17 22P
C18 22P
J3 HD
C14 104
RIGHT ANGLE
VR2 1K SMT
R27 75
TP2
R19 10K
C23 103
R24 3.3M
R25 1K
R26 3.3K
C15 10/16C
C16 100P
R29 100
R30 47K
C19 223
C20 102
MCK
XSG1 IN
XSG1 OUT
INTEG
XSG2 OUT
XSG2 IN
U4 HC00
TM-7EX RD1
REF. 7EXRD1
FAB 30-1326-01 REV A
TOLERANCES
UNLESS OTHERWISE SPECIFIED
MATERIAL:
UNIT: INCHES
PULNIX AMERICA, INC.
1330 ORLEANS DRIVE, SUNNYVALE, CA 94089 (408) 747-0300
DRAWN HAI 1-16-98
ENGR
APPROVED
SCHEMATIC DIAGRAM
GENLOCK BD.
C
DWG. NO. 31-0008
REV 1
SCALE: NONE
SHEET: 1 OF 1

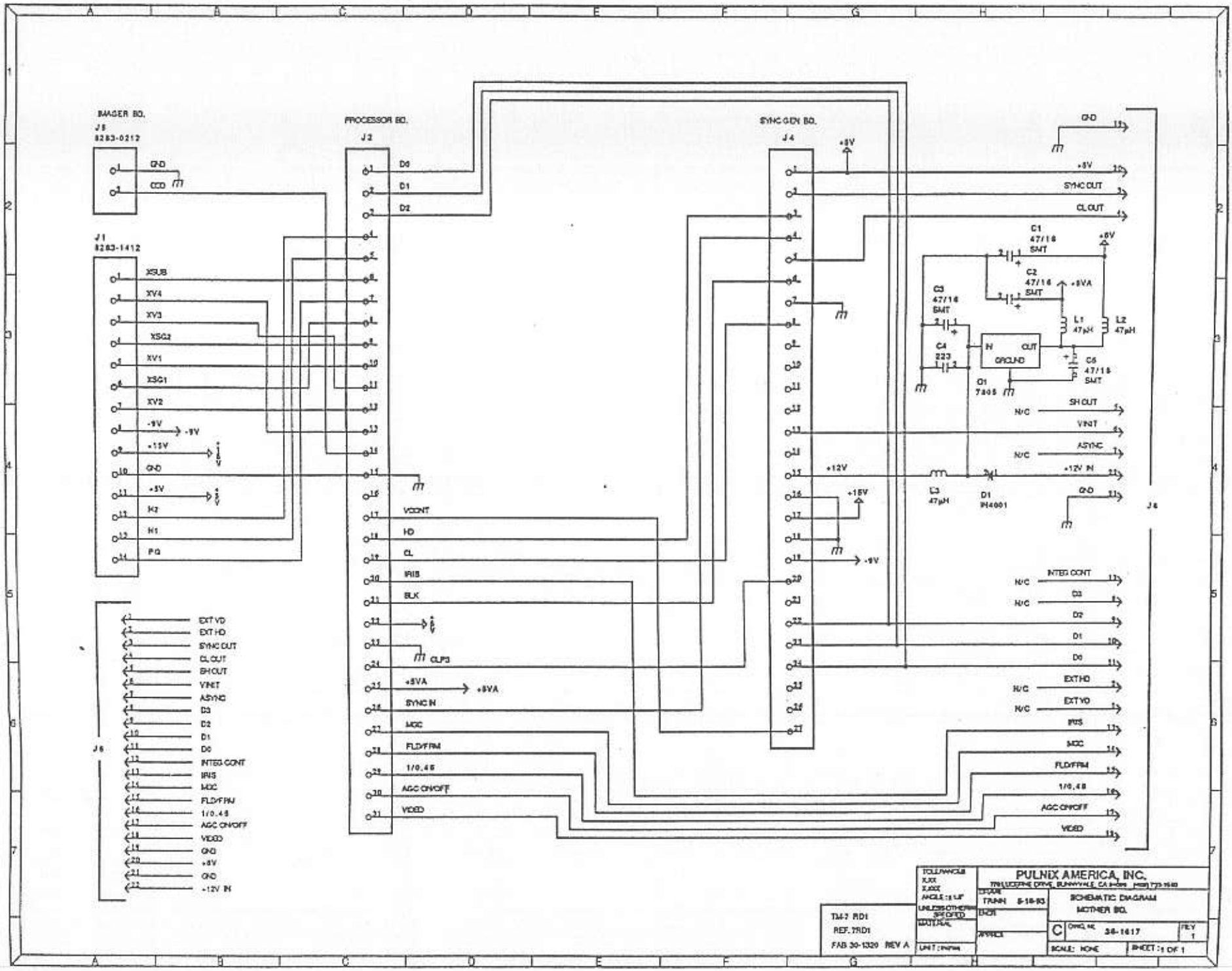
IMAGER BD.
J5
8283-0212
GND
CCD
J1
8283-1412
XSUB
XV4
XV3
XSG2
XV1
XSG1
XV2
-9V
+15V
GND
+5V
H2
H1
PG
PROCESSOR BD.
J2
D0
D1
D2
VCONT
HD
CL
IRIS
BLK
CLP3
+5VA
SYNC IN
MOC
FLD/FRM
1/0.48
AGC ON/OFF
VIDEO
SYNC GEN BD.
J4
+5V
+12V
+15V
-9V
GND
SYNC OUT
CL OUT
C1
47/16
SMT
C2
47/16
SMT
C3
47/16
SMT
C4
223
C5
47/16
SMT
+5VA
L1
47µH
L2
47µH
IN
OUT
GROUND
Q1
7805
SH OUT
N/C
VINT
ASYNC
+12V IN
L3
47µH
D1
IN4001
INTEG CONT
D3
EXT HD
EXT VD
J6
EXT VD
EXT HD
SYNC OUT
CL OUT
SH OUT
VINT
ASYNC
D3
D2
D1
D0
INTEG CONT
IRIS
MOC
FLD/FRM
1/0.48
AGC ON/OFF
VIDEO
GND
+5V
GND
+12V IN
PULNIX AMERICA, INC.
SCHEMATIC DIAGRAM
MOTHER BD.
TM-7 RD1
REF. TRD1
FAB 30-1320 REV A
C
30-1617
REV 1
SCALE: NONE
SHEET 1 OF 1

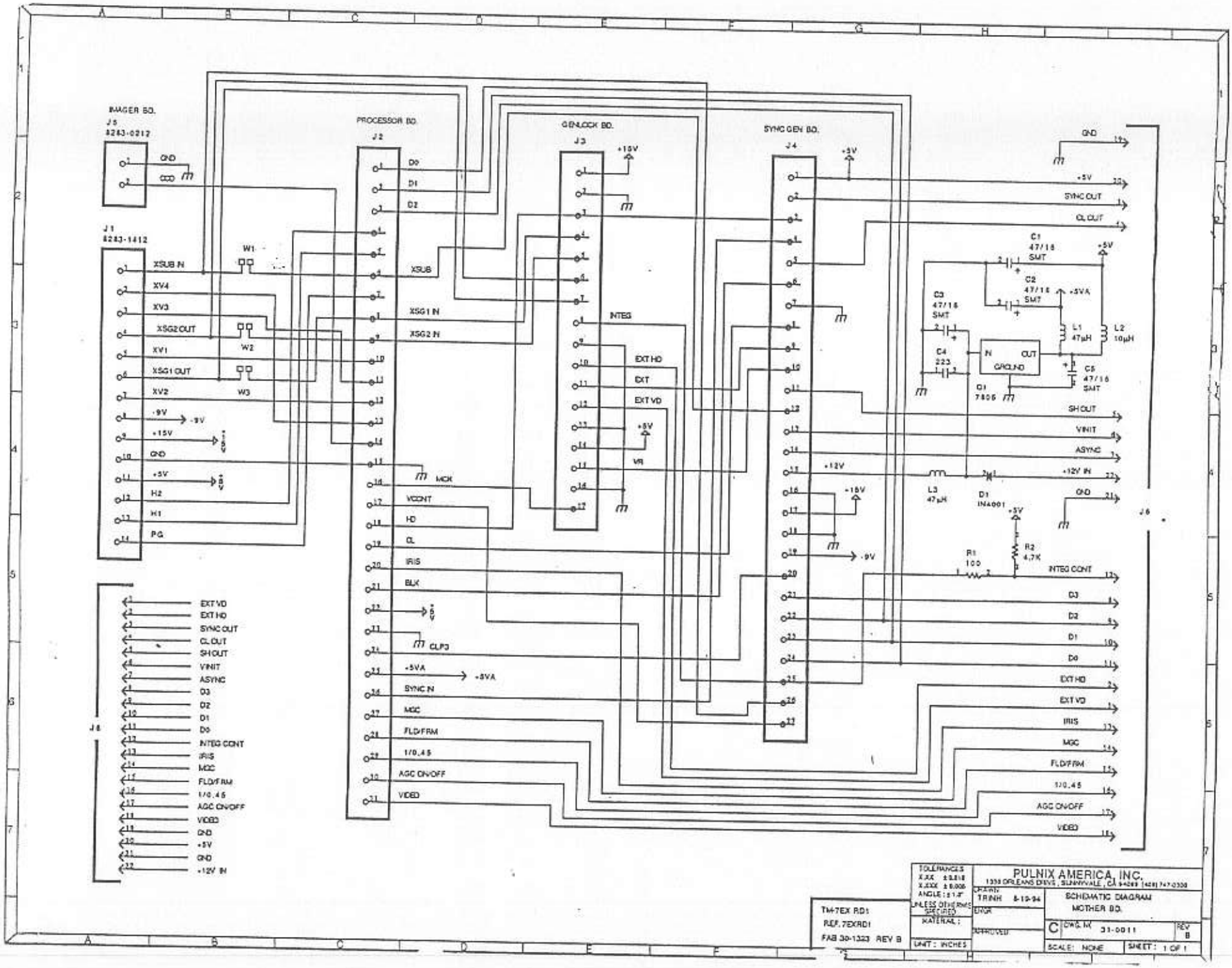
IMAGER BD.
J5
8243-0212
GND
J1
8243-1412
XSUB IN
XV4
XV3
XSG2 OUT
XV1
XSG1 OUT
XV2
-9V
+15V
GND
+5V
H2
H1
PG
W1
W2
W3
PROCESSOR BD.
J2
D0
D1
D2
XSUB
XSG1 IN
XSG2 IN
MCK
VCONT
HD
CL
IRIS
BLK
CLP3
+5VA
SYNC IN
MGC
FLD/FRM
1/0.45
AGC ON/OFF
VIDEO
GENLOCK BD.
J3
+15V
INTEG
EXT HD
EXT
EXT VD
+5V
VR
SYNC GEN BD.
J4
+5V
+12V
-15V
-9V
GND
+5V
SYNC OUT
CL OUT
C1
47/16
SMT
C2
47/16
SMT
+5VA
C3
47/16
SMT
C4
223
L1
47µH
L2
10µH
IN
OUT
GROUND
C5
47/16
SMT
U1
7805
SH OUT
VINIT
ASYNC
+12V IN
L3
47µH
D1
IN4001
R1
100
R2
4.7K
INTEG CONT
D3
D2
D1
D0
EXT HD
EXT VD
IRIS
MGC
FLD/FRM
1/0.45
AGC ON/OFF
VIDEO
J6
EXT VD
EXT HD
SYNC OUT
CL OUT
SH OUT
VINIT
ASYNC
D3
D2
D1
D0
INTEG CONT
IRIS
MGC
FLD/FRM
1/0.45
AGC ON/OFF
VIDEO
GND
+5V
GND
+12V IN
TM-7EX RD1
REF. 7EXRD1
FAB 30-1323 REV B
TOLERANCES
X.XX ±0.010
X.XXX ±0.005
ANGLE: ±1.0°
UNLESS OTHERWISE SPECIFIED
MATERIAL:
UNIT: INCHES
PULNIX AMERICA, INC.
1330 ORLEANS DRIVE, SUNNYVALE, CA 94089 (408) 747-0300
DRAWN TRINH 8-12-94
ENGR
APPROVED
SCHEMATIC DIAGRAM
MOTHER BD.
C
DWG. NO. 31-0011
REV B
SCALE: NONE
SHEET: 1 OF 1

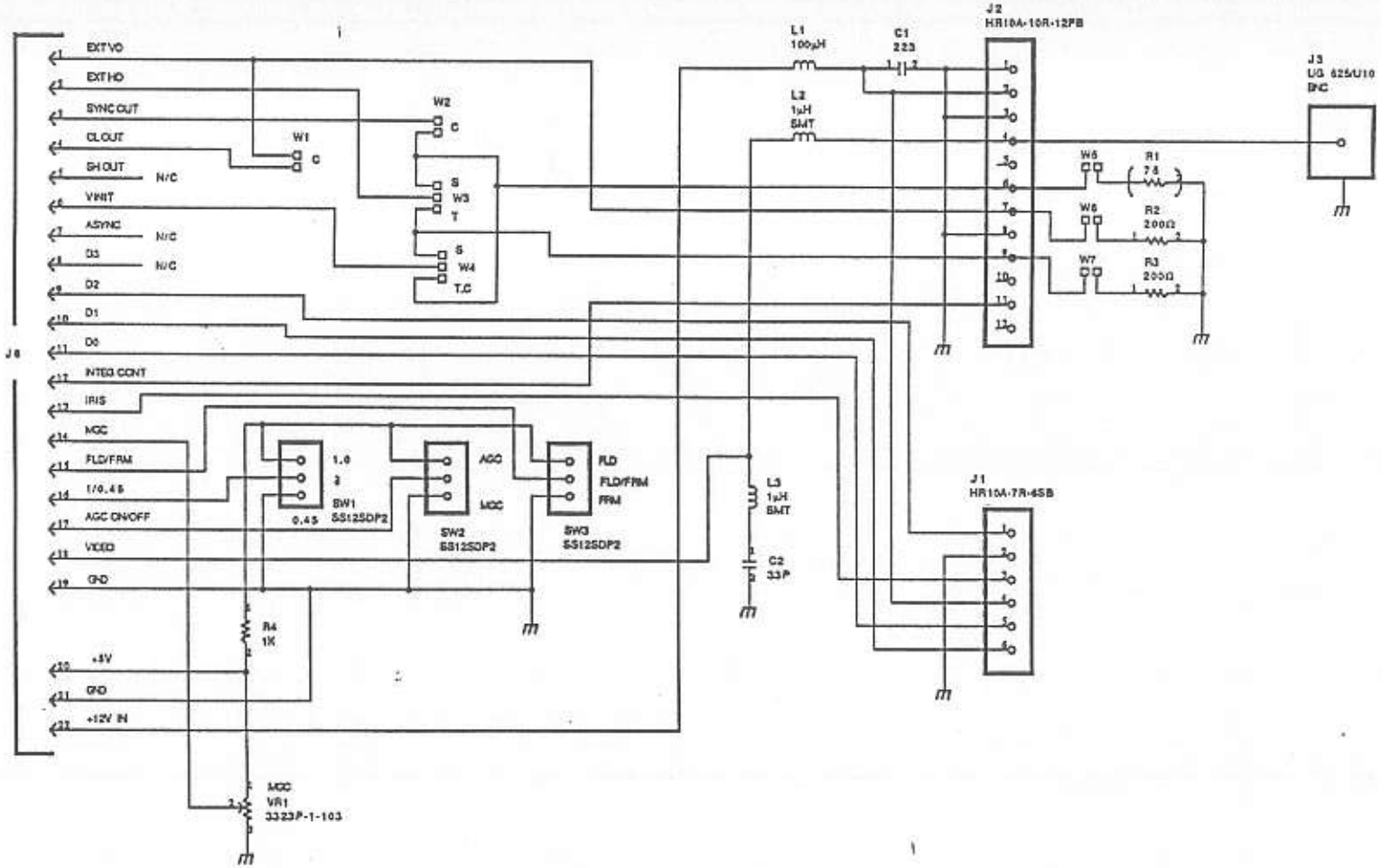

TM-7EXRDI
REF. TEXRDI
FAB 30-1324 REV B

TOLERANCES
X.XX ±0.010
X.XXX ±0.005
ANGLE ±1.0°
UNLESS OTHERWISE SPECIFIED
MATERIAL:
UNIT: INCHES

PULNIX AMERICA, INC.
1330 ORLEANS DRIVE, SUNNYVALE, CA 94089 (408) 747-0300

DRAWN TRINH 8-10-94
ENGR
APPROVED

SCHEMATIC DIAGRAM
REAR BD.

C DWG. NO. 31-0010 REV E

SCALE: NONE SHEET: 1 OF 1

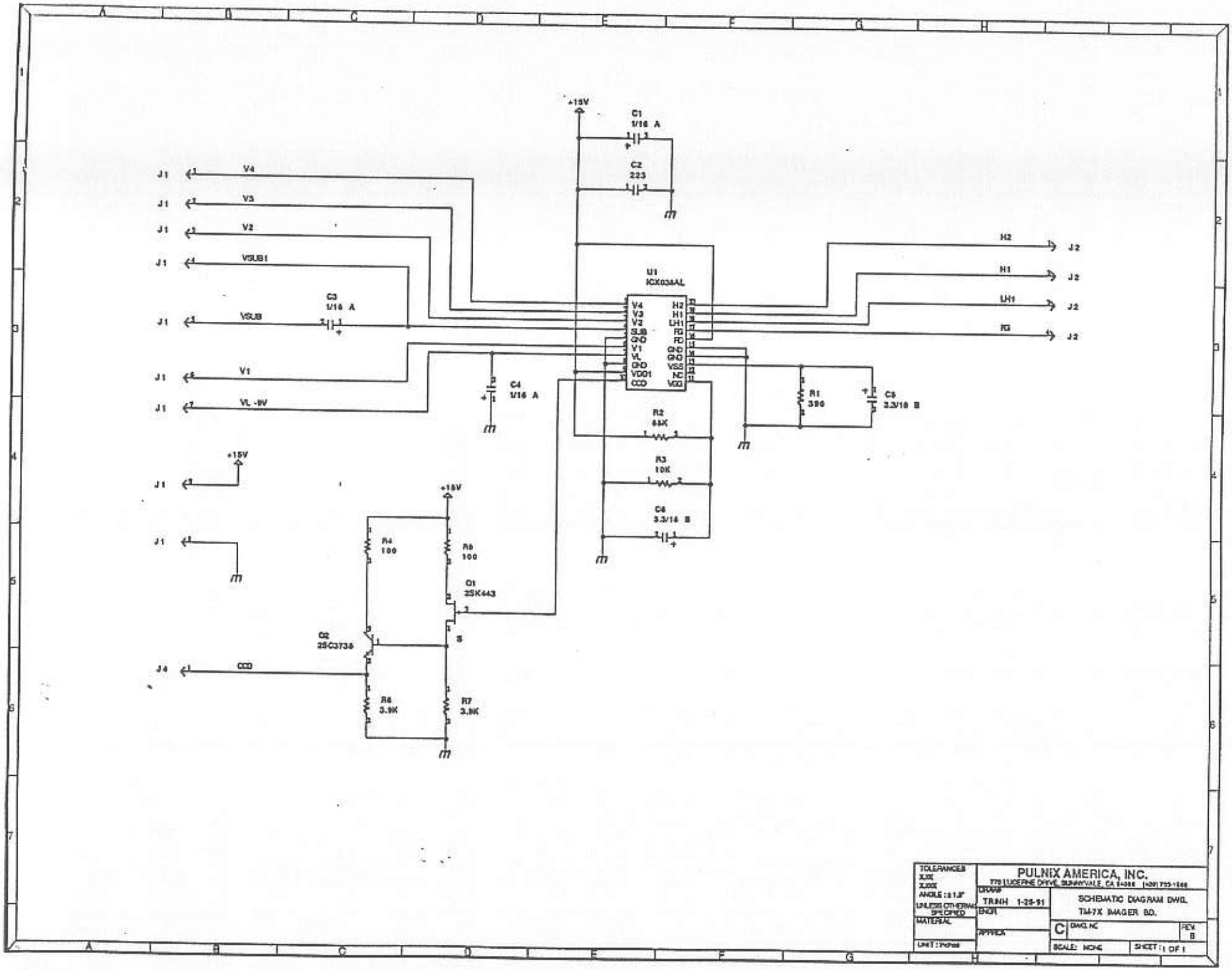
+15V
C1
1/16 A
C2
223
J1
V4
V3
V2
VSUB1
VSUB
V1
VL -9V
C3
1/16 A
C4
1/16 A
U1
ICX038AL
V4
V3
V2
SUB
GND
V1
VL
GND
VDD1
CCD
H2
H1
LH1
RG
RD
GND
GND
VSS
NC
VDD
J2
R1
390
C5
3.3/16 B
R2
68K
R3
10K
C6
3.3/16 B
R4
100
R5
100
Q1
2SK443
Q2
2SC3735
S
J4
CCD
R6
3.9K
R7
3.9K
TOLERANCES
X.XX
X.XXX
ANGLE ± 0.5°
UNLESS OTHERWISE SPECIFIED
MATERIAL
UNIT: inches
PULNIX AMERICA, INC.
DRAWN
TRINH 1-25-91
ENGR
APPRVD
SCHEMATIC DIAGRAM DWG.
TM-7X IMAGER BD.
C
DWG. NO
REV
B
SCALE: NONE
SHEET: 1 OF 1

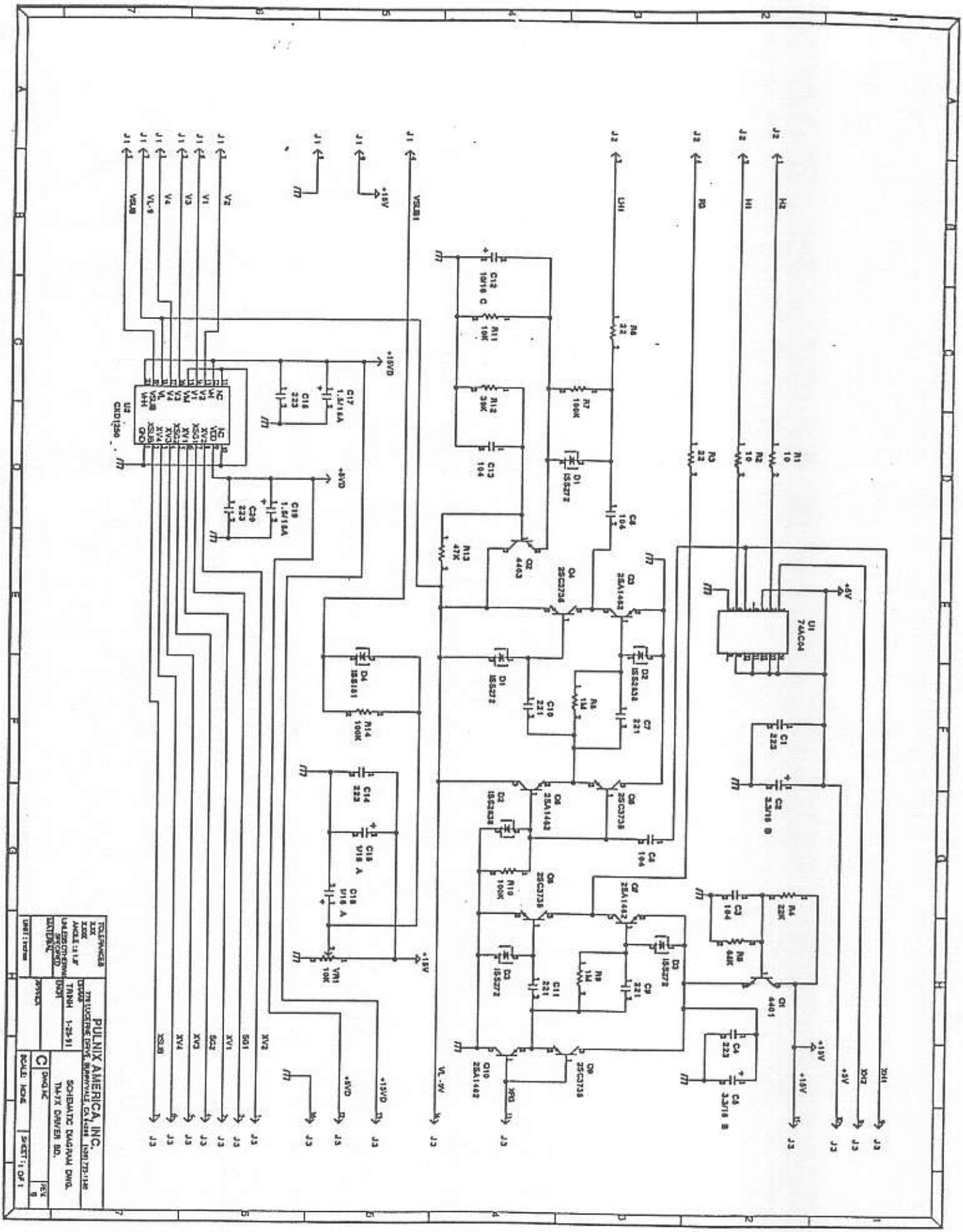
PULNIX AMERICA, INC.
SCHEMATIC DIAGRAM DWG.
TM-7X DRIVER BD.
DWG.NO
REV
SCALE: NONE
SHEET 1 OF 1
TRANH
1-29-91
U1
74AC04
U2
CXD1250
Q1
4401
Q2
4403
Q3
2SA1462
Q4
2SC3736
Q5
2SA1462
Q6
2SC3736
Q7
2SA1462
Q8
2SC3736
Q9
2SC3736
Q10
2SA1462
D1
1SS272
D2
1SS2436
D3
1SS272
D4
1SS181
R1
10
R2
10
R3
22
R4
22K
R5
44K
R6
1M
R7
100K
R8
1M
R9
1M
R10
100K
R11
10K
R12
39K
R13
47K
R14
100K
VR1
10K
C1
223
C2
3.3/16 B
C3
104
C4
3.3/16 B
C5
104
C6
104
C7
221
C8
221
C9
221
C10
221
C11
221
C12
10/16 C
C13
104
C14
223
C15
1/16 A
C16
223
C17
1.5/16A
C18
1/16 A
C19
1.5/16A
C20
223
+5V
+15V
+15VD
+5VD
VL-9V
VSUB
H1
H2
R3
V1
V2
V3
V4
VL-9
XV1
XV2
XV3
XV4
SG1
SG2
XSUB

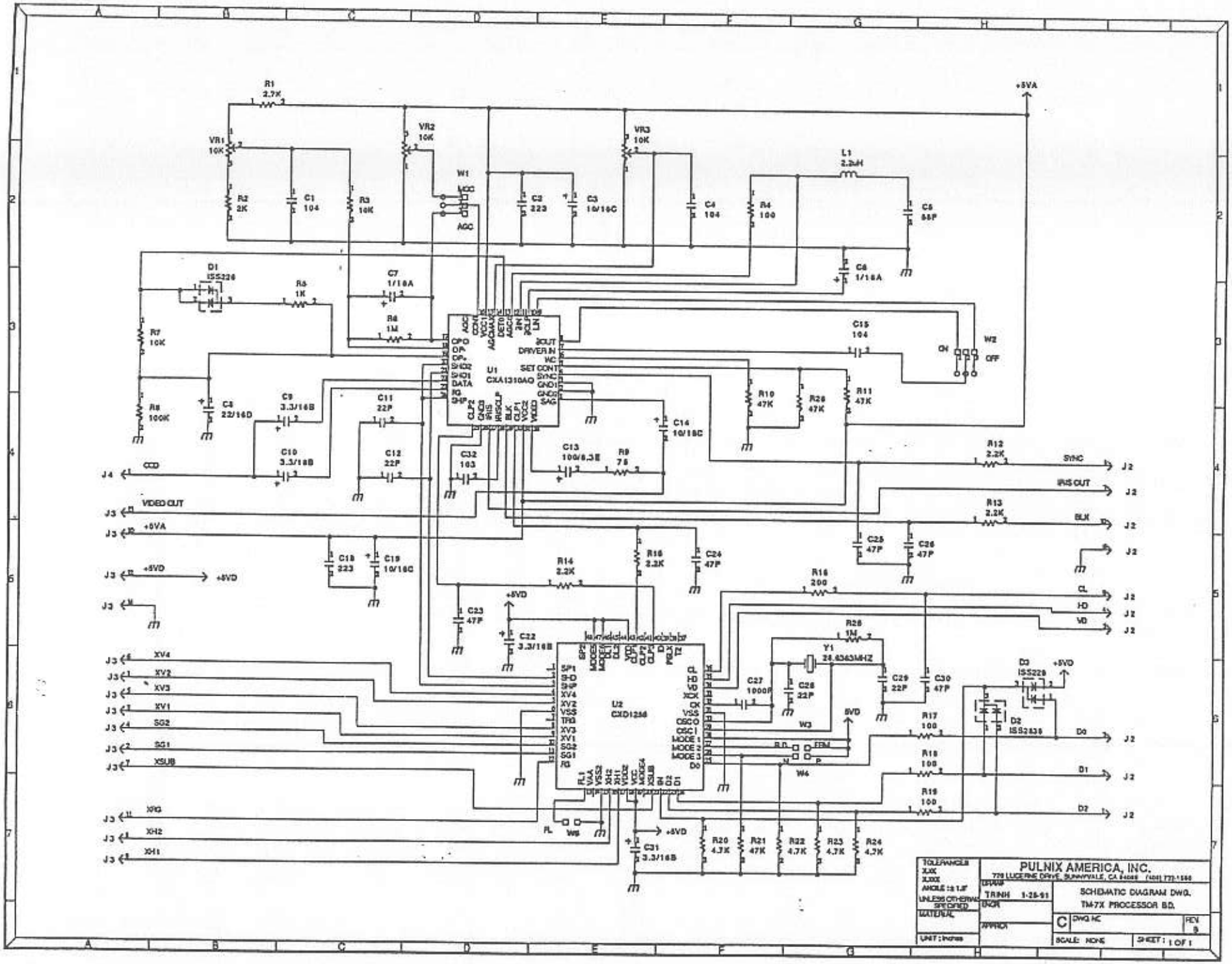
PULNIX AMERICA, INC.
SCHEMATIC DIAGRAM DWG.
TM-7X PROCESSOR BD.
U1 CXA1310AQ
U2 CXD1256
+5VA
+5VD
VIDEO OUT
SYNC
IRIS OUT
BLK
CL
HD
VD
D0
D1
D2
XV4
XV2
XV3
XV1
SG2
SG1
XSUB
XH2
XH1
CCD
SCALE: NONE
SHEET 1 OF 1

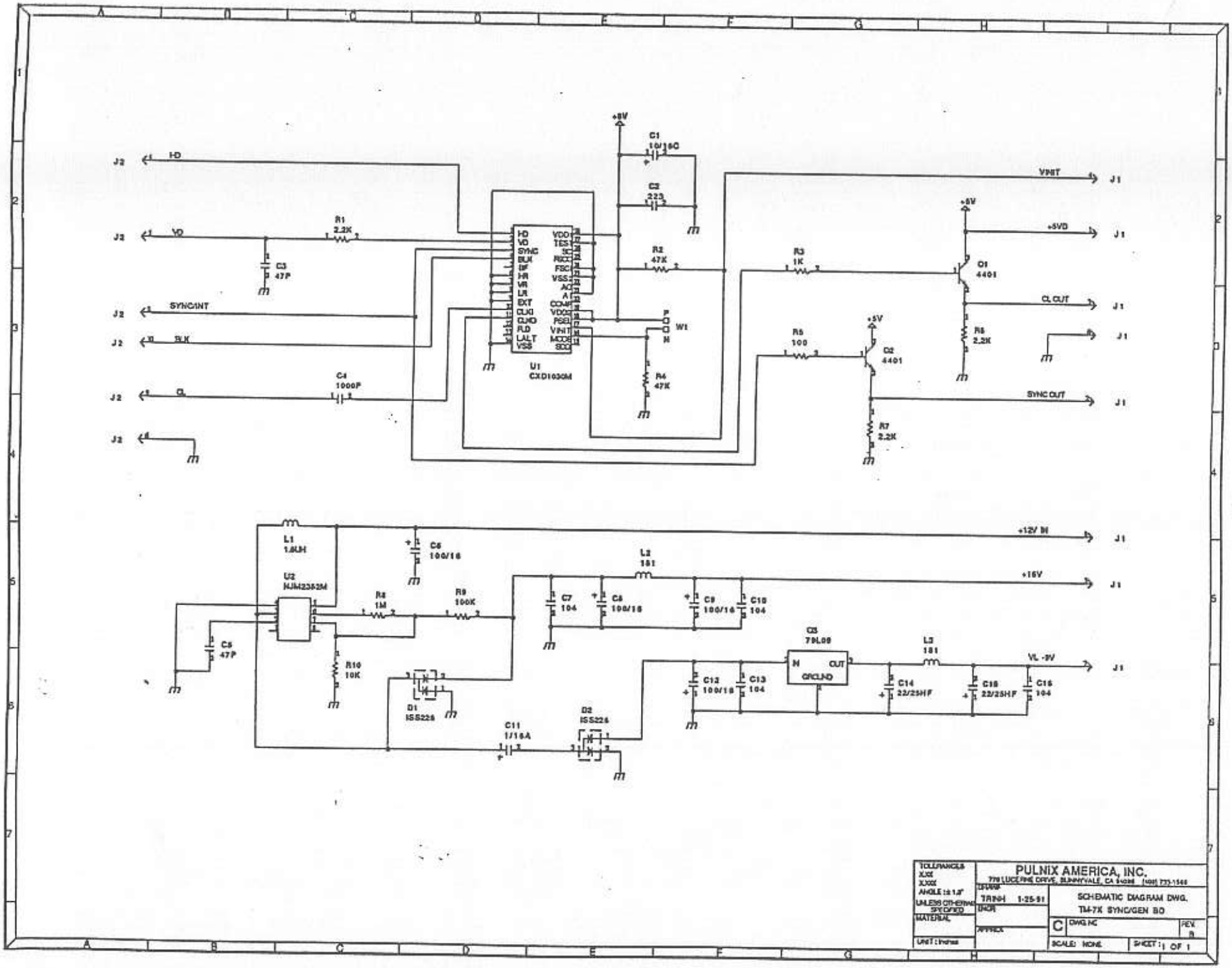
J2
HD
VD
SYNC/INT
BLK
CL
R1 2.2K
C3 47P
C4 1000P
+8V
C1 10/16C
C2 223
R2 47K
R4 47K
W1
U1 CXD1030M
VDD1
TCS1
SC
RSC1
FSC
VSS2
AC
A
COMP
VDD2
PSEL
VINIT
MODE
SDO
HD
VD
SYNC
BLK
BF
HR
VR
LR
EXT
CLKI
CLKO
RLD
LALT
VSS
VINIT
J1
R3 1K
R5 100
+5V
Q2 4401
R7 2.2K
Q1 4401
R6 2.2K
+5VD
CL OUT
SYNC OUT
L1 1.8UH
U2 NJM2352M
C5 47P
C6 100/16
R8 1M
R9 100K
R10 10K
D1 ISS226
C11 1/16A
D2 ISS226
C7 104
C8 100/16
L2 181
C9 100/16
C10 104
+12V IN
+16V
C12 100/16
C13 104
C3 79L09
IN
OUT
GROUND
C14 22/25HF
L3 181
C18 22/25HF
C16 104
VL -9V
TOLERANCES
X.XX
X.XXX
ANGLE ± 1.0°
UNLESS OTHERWISE SPECIFIED
MATERIAL
UNIT: inches
PULNIX AMERICA, INC.
770 LUCERNE DRIVE, SUNNYVALE, CA 94086 (408) 773-1548
DRAWN
TRINH 1-25-91
CHKD
APPROV
SCHEMATIC DIAGRAM DWG.
TM-7X SYNC/GEN BD
C
DWG NO
REV
SCALE: NONE
SHEET 1 OF 1

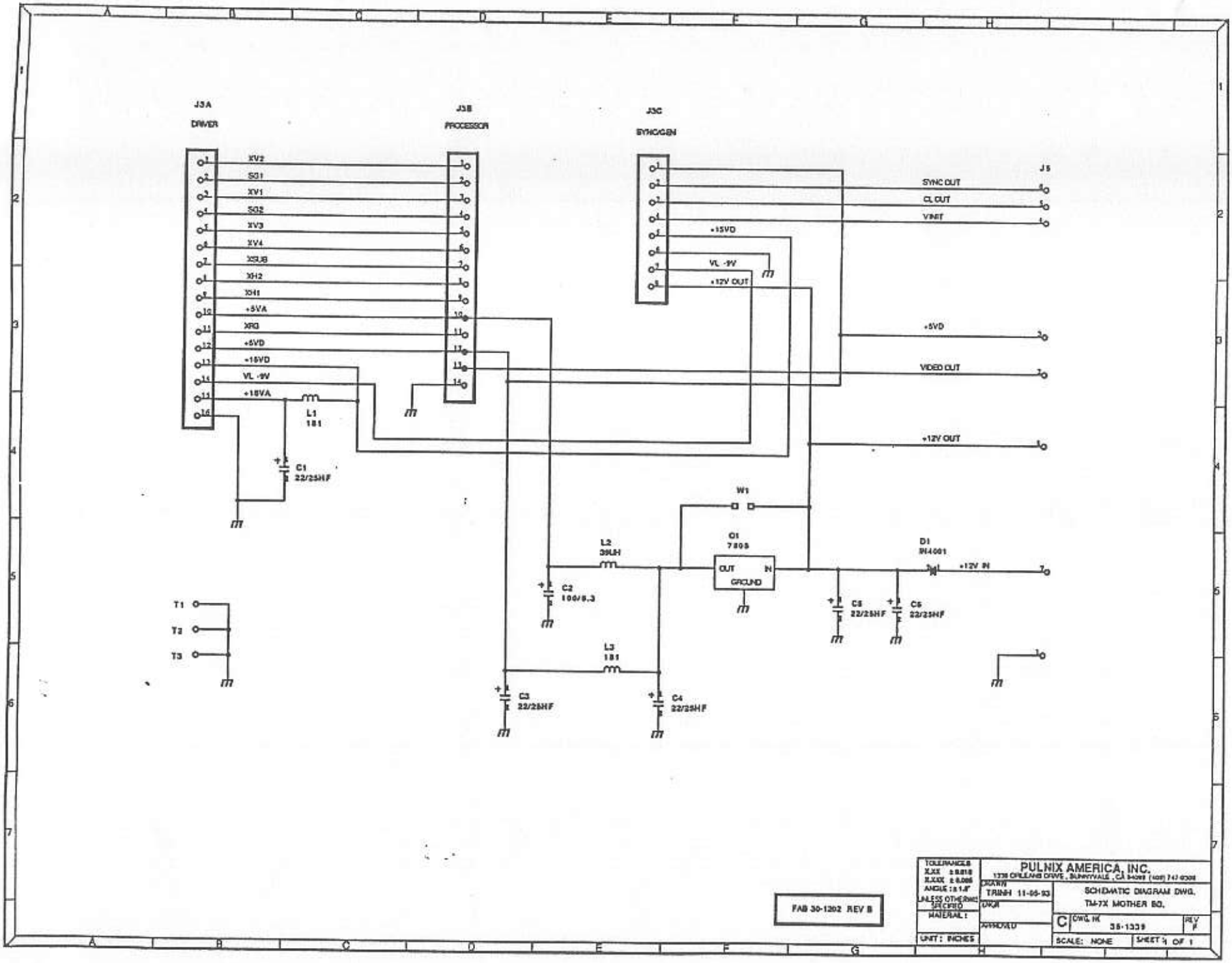
J3A
DRIVER
J3B
PROCESSOR
J3C
SYNC/GEN
J5
XV2
SG1
XV1
SG2
XV3
XV4
XSUB
XH2
XH1
+5VA
XRG
+5VD
+15VD
VL -9V
+15VA
SYNC OUT
CL OUT
VINIT
+15VD
VL -9V
+12V OUT
+5VD
VIDEO OUT
+12V OUT
L1
181
C1
22/25HF
W1
Q1
7805
OUT
IN
GROUND
L2
39UH
C2
100/6.3
D1
IN4001
+12V IN
C5
22/25HF
C6
22/25HF
L3
181
C3
22/25HF
C4
22/25HF
T1
T2
T3
FAB 30-1202 REV B
TOLERANCES
X.XX ±0.010
X.XXX ±0.005
ANGLE ±1.0°
UNLESS OTHERWISE SPECIFIED
MATERIAL:
UNIT: INCHES
PULNIX AMERICA, INC.
1330 ORLEANS DRIVE, SUNNYVALE, CA 94089 (408) 747-0300
DRAWN
TRINH 11-05-93
DR/JI
APPROVED
SCHEMATIC DIAGRAM DWG.
TM-7X MOTHER BD.
C
DWG. NO
35-1339
REV
F
SCALE: NONE
SHEET 1 OF 1

PULNiX

Industrial Products Division

In the U.S.
PULNIX America Inc.
1330 Orleans Drive
Sunnyvale, CA 94089
TEL 408-747-0300
TEL 800-445-5444
FAX 408-747-0880

In the U.K.
PULNIX Europe Ltd.
PULNIX House
Aviary Court/Wade Road
Basingstoke, Hants RG24 OPL
Tel: 0256-475555
Tlx: 859532
Fax: 0256-466268

In Germany
PULNIX Europe Ltd.
Steinbruch 5
D-8755 Alzenau
Tel: 06023-4666
Fax: 06023-4667

In Japan
Takenaka System Co. Ltd.
7-1, Shinomiya Narano Cho
Yamashina-ku, Kyoto, 607
Tel: 075-583-8787

PULNIX EUROPE LTD.
SIEMENSSTR. 12
63755 ALZENAU